DIGITAL FIBER SENSOR

FX-100 SERIES

Operation Guide

INDEX

1 Functional Description .....P. 1
- 1-1. Functional Description .....P. 1
- 1-2. Operating Portion .....P. 1

2 Diagram of Functions and Settings.....P. 2
- 2-1. Diagram of Functions and Settings ...P. 2

3 Others .....P. 3
- 3-1. Precautions When Selecting Settings ...P. 3
- 3-2. Factory Settings.....P. 3
- 3-3. Error Display Indicator Readings.....P. 3

4 RUN Mode .....P. 4
- 4-1. RUN Mode.....P. 4
- 4-2. Threshold Value Fine Adjustment Function...P. 4
- 4-3. Key Lock.....P. 4

5 SET Mode .....P. 5
- 5-1. SET Mode Functions and Settings ....P. 5
- 5-2. Teaching .....P. 7
- 5-3. Output Operation Setting.....P.10
- 5-4. Timer Operation Setting.....P.10
- 5-5. Light-emitting Amount Selection Setting ...P.11
- 5-6. Emission Frequency Setting.....P.12

6 PRO Mode P.13
- 6-1. PRO Mode Functions and Settings....P.13
- 6-2. Shift setting P.18
- 6-3. External Input Setting.....P.18
- 6-4. Threshold Value Follow-up Cycle Setting...P.19
- 6-5. GETA Function Setting.....P.20
- 6-6. ECO Setting P.21
- 6-7. Digital Display Inversion Setting P.22
- 6-8. Threshold Value Margin Setting.....P.22
- 6-9. Setting Copy P.23
- 6-10. Reset P.24

7 Quick Setting Function.....P.25

8 Code Setting Function P.26

1 Functional Description

1-1. Functional Description

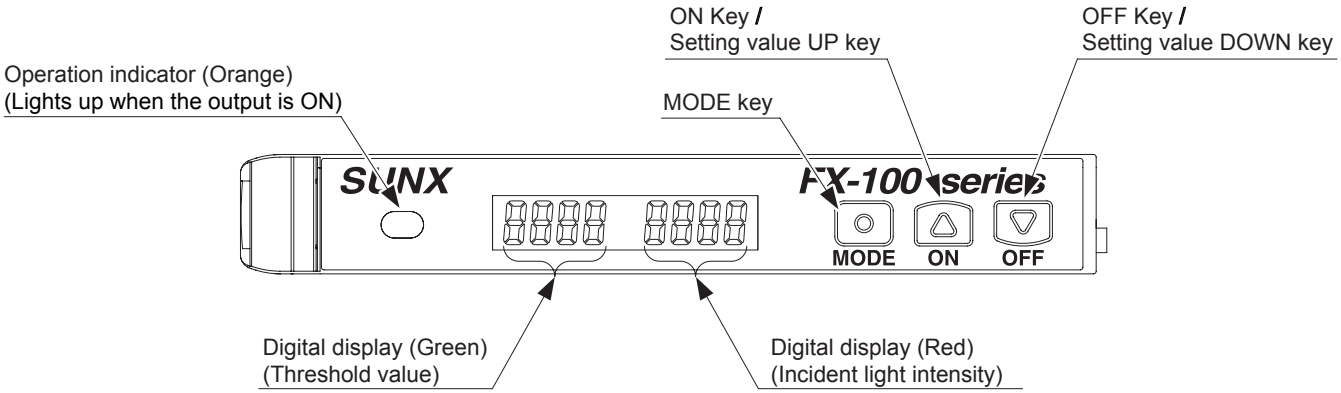

1-2. Operating Portion

Three keys [(MODE key), (ON key / setting value UP key) and (OFF key / setting value DOWN key)] are used to carry out all settings.

MODE key	ON key / Setting value UP key	OFF key / Setting value DOWN key
· Selection of setting items · Confirmation of set contents · RUN Mode Press for 2 sec.: To SET mode Press for 4 sec.: To PRO mode <When using the GETA function (Refer to p.20)> Press once (1 sec. or less): The incident light intensity before the GETA function is set is indicated for approx. 2 sec. · Other than RUN mode Press for 2 sec. or more: To RUN mode or Cancel	· Selection of setting contents · Threshold value settings in teaching mode · Fine adjustments to the threshold value (When pressed and held, the value will change more rapidly.)	

In addition, the keys can be used in combination to carry out the following.

and	and
· Key lock setting / release (Refer to p.4) Press simultaneously for 2 sec.	· Quick setting function (Refer to p.25) Press simultaneously for 2 sec. · Code setting function (Refer to p.26) Press simultaneously for 4 sec.

2 Diagram of Functions and Settings

2-1. Diagram of Functions and Settings

The amplifier features and settings can be generally classified into three main modes: the 'RUN mode' for normal sensing operation, the 'SET mode' for basic settings, and the 'PRO mode' that contains more detailed settings.

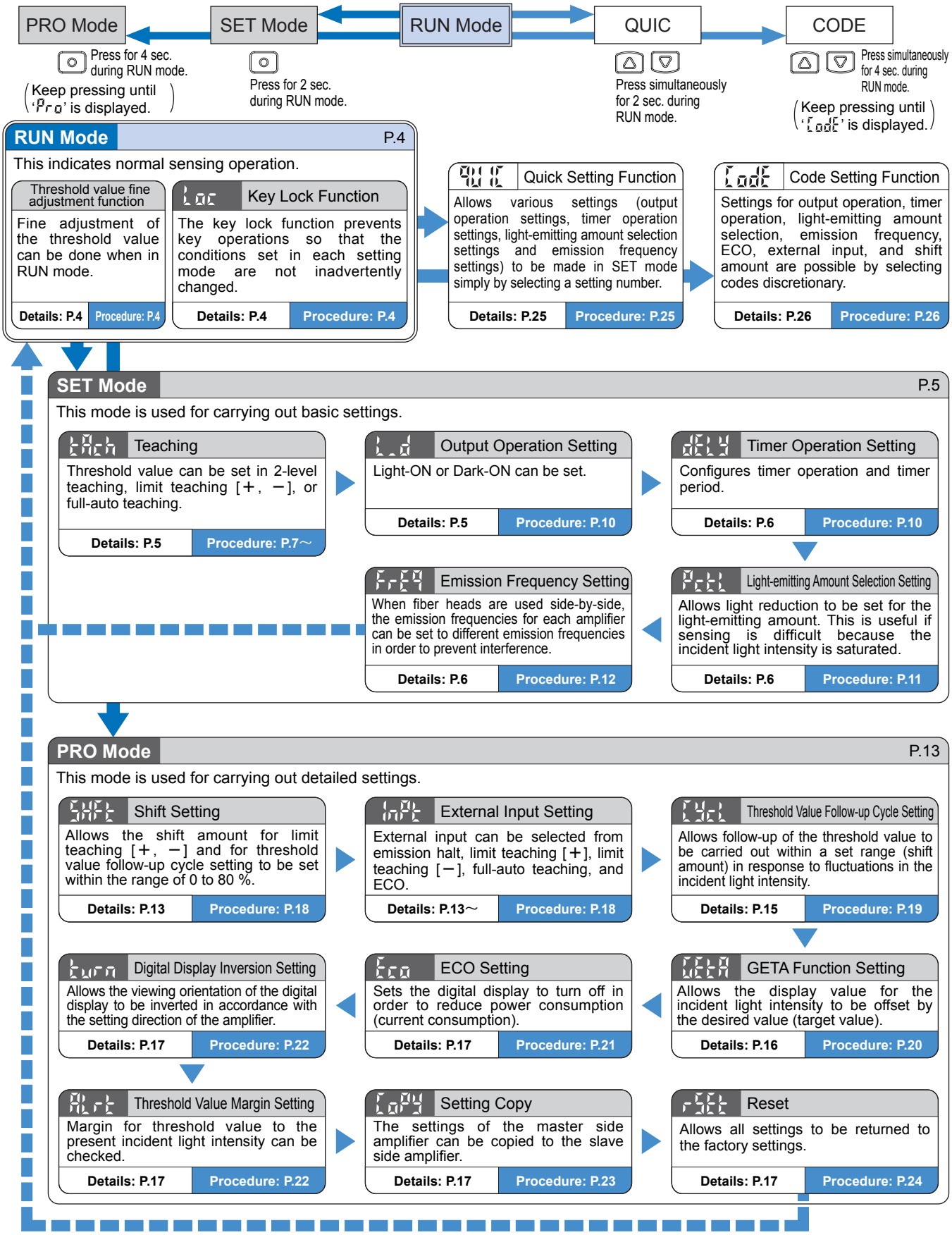

3 Others

3-1. Precautions When Selecting Settings

If (MODE key) is pressed for 2 sec. while setting is in progress in a mode other than RUN mode, the mode will switch to RUN mode. When this occurs, the settings which had been changed before (MODE key) was pressed for 2 sec. will be confirmed.

Setting protection

You can use the 'key lock function' to protect settings. (Refer to p.4)
Key lock function can be used to prevent the operator from accidentally changing the sensor settings.

3-2. Factory Settings

Factory settings for the **FX-100** series are indicated below:
If the unit is reset using the 'Reset' from 'PRO Mode' on p.24, the resulting settings will be those indicated below:

SET Mode

Item		Factory Setting	
		Settings	Digital display
Threshold value		40	40
Output operation setting		Dark-ON	L.d d.on
Timer operation setting		Without timer	dELY non
Timer period setting		ON-delay timer : 10 ms OFF-delay timer : 10 ms	ond 10 ofd 10 *When timer is not set, this mode is not displayed.
Light-emitting amount selection setting		OFF	PctL oFF
Emission frequency setting	**FX-101□**	0 (Response time: 250 μs or less)	FrEq F- 0
	FX-102□	1 (Response time: 2.5 ms or less)	FrEq F-01

PRO Mode

Item	Factory Setting	
	Settings	Digital display
Shift setting	Shift amount 15 %	SHFt 15P
External input setting	Emission halt	InPt E-oF
Threshold value follow-up cycle setting	OFF	CYcL oFF
GETA function setting	OFF	GEtA oFF
ECO setting	OFF	Eco oFF
Digital display inversion setting	OFF	turn oFF
Threshold value margin setting	OFF	ALrt oFF
Setting copy	NO	CoPY no
Reset	NO	rSEt no

3-3. Error Display Indicator Readings

In case of errors, attempt the following measures:

Digital display	Error description	Measures
Er-0	EEPROM writing error	Contact our office.
Er-1	The load has short-circuited and excess current is flowing.	Turn off the power, then check the load.
Er-5	Communication error. (Disconnection, connection failure, etc.)	Turn off the power, and then check the wiring for using the setting copy function.

4 RUN Mode

4-1. RUN Mode

Digital display

●When turn ON the power, the Model No. is displayed in the green digital display, and the emission frequency is displayed in the red digital display. Then switch into RUN mode [digital display (green: threshold value, red: incident light intensity.)]

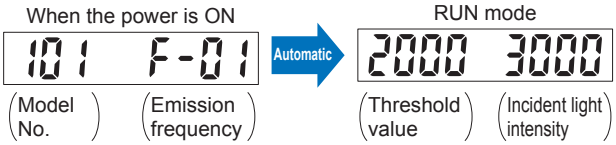

●'E-oF' is displayed in the red digital display when emission halt is selected in the external input setting and externally received the signal.

When external input

2000 E-oF

Caution

Displays blink alternately

2000 E-oF ⇄ 2000 0

If 'E-oF' and '0' (incident light intensity) are blinking alternately in the digital displays, check if there is a contact between the output wire (black) and the external input wire (white).

For the setting of external input, refer to '6 **PRO MODE 6-3. External input setting** (P.18).'

●When ECO setting mode is ON, the digital display turns off in 20 sec. approx. in RUN mode. To light up the digital display again, press any key for 2 sec. or more.

For the setting of ECO, refer to '6 **PRO MODE 6-6. ECO setting** (P.21).'

4-2. Threshold Value Fine Adjustment Function

●Fine adjustment of the threshold value can be done when in RUN mode.

●The threshold value changes when △ (setting value UP key) or ▽ (setting value DOWN key) is pressed. (when the key is pressed long, the value is accelerated.)

●The threshold value is stored after 3 sec.

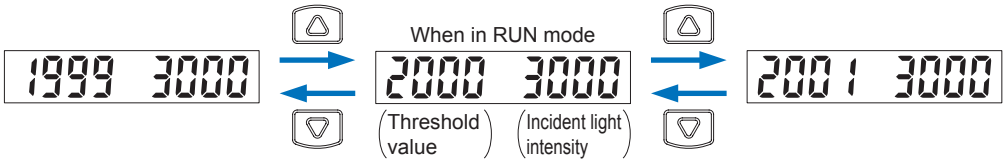

4-3. Key Lock Function

●The key lock function prevents key operations so that the conditions set in each setting mode are not inadvertently changed.

●In the key lock condition, 'Loc on' is displayed when any key is displayed.

Key lock set

When in RUN mode

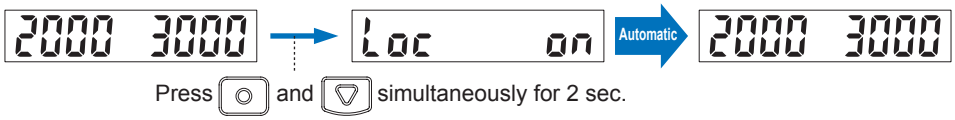

Key lock released

When in RUN mode

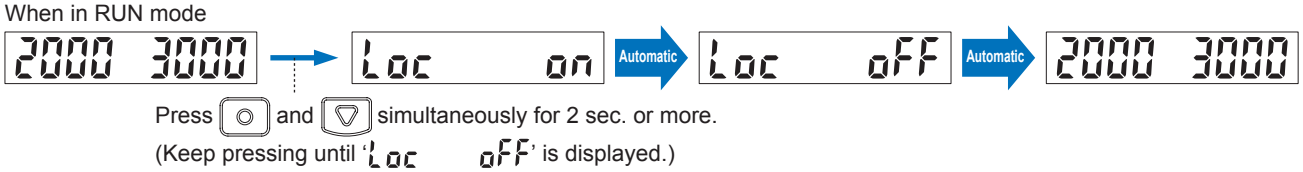

5 SET Mode

5-1. SET Mode Functions and Settings

SET mode is the mode used for making basic settings. Settings for five functions can be configured.

tAch : Teaching

Refer to p.7～ for setting procedure

The ‘threshold value’ can be set by utilizing three kinds of teaching, whichever ‘2-level teaching’, ‘limit teaching [＋, －]’ or ‘full-auto teaching’.

> Make sure that detection may become unstable if less margin is applied in the use environment when teaching.

2-level Teaching P.7

2-level teaching is a method of setting the threshold value by teaching the amplifier unit two different status conditions - sensing object present and sensing object absent.
The ‘threshold value’ is normally set using this method.

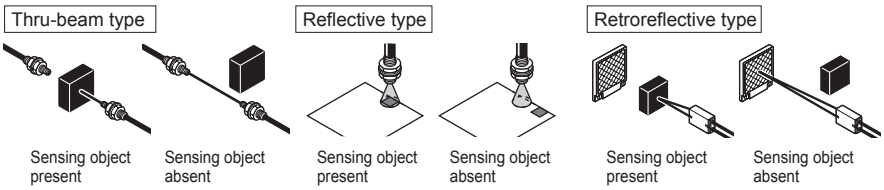

Limit Teaching [＋, －] P.8～

Teaches only the status condition in which no sensing object is within sensing range (status in which incident light intensity is stable). This method is used to set a ‘threshold value’ for conducting sensing in the presence of a background, or when extremely small objects are to be detected.

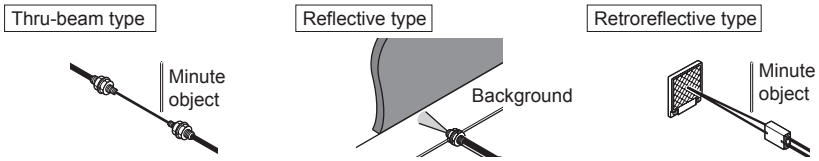

Full-auto Teaching P.9

This method is used to set the threshold value while the sensing objects are still moving on the production line, without stopping the production line.

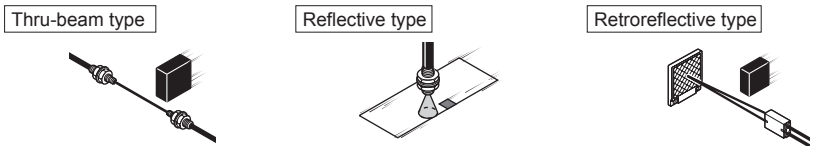

L.d : Output Operation Setting

Refer to p.10 for setting procedure

This mode allows the selection of output operation from either L-ON (Light-ON), or D-ON (Dark-ON).
When set to ‘L-ON’, the output will be ON if the incident light intensity becomes greater than the ‘threshold value’.
When set to ‘D-ON’, the output will be ON if the incident light intensity becomes less than the ‘threshold value’.

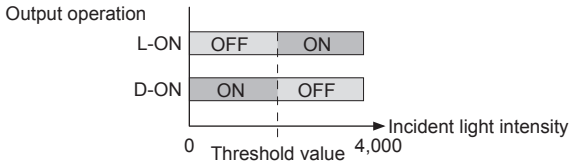

* The factory setting is ‘Dark-ON (D-ON)’.

dELY : Timer Operation Setting

Refer to p.10 for setting procedure

This sets timer operation and timer period.
Without timer, ON-delay timer, or OFF-delay timer can be set.
In case of setting ON-delay timer or OFF-delay timer in the timer operation setting mode, timer period can be set.
Select timer period from 1 ms, 5 ms, 10 ms, 20 ms, 40 ms, 50 ms, 100 ms, 500 ms, and 1,000 ms.
* The factory setting is 'Without timer'.

PctL : Light-emitting Amount Selection Setting

Refer to p.11 for setting procedure

Allows light reduction to be set for the light-emitting amount.
When the setting is ON, the light-emitting amount is reduced.
Use this setting if sensing is difficult because the incident light intensity is saturated (4,000 or higher).
* The factory setting is 'OFF'.

> If the incident light intensity is still saturated (4,000 or higher) even when the light reduction setting is used, make the distance between the sensing objects and the fiber head longer.

FrEq : Emission Frequency Setting

Refer to p.12 for setting procedure

When fiber heads are used side-by-side, the emission frequencies for each amplifier can be set to different frequencies in order to prevent interference.
For the **FX-101**□, this function is activated by setting the emission frequency to 1, 2 or 3.
For the **FX-102**□, this function is activated by setting the emission frequency to 1, 2, 3 or 4.
<Number of units for interference prevention>
• Combination of **FX-101**□ only: Maximum 3 units
• Combination of **FX-102**□ only: Maximum 4 units
• Combination of **FX-101**□ and **FX-102**□: Maximum 4 units

> • For the **FX-101**□, the interference prevention function will not operate for emission frequency 0 (factory setting).
> • The response time will change when the emission frequency is changed.

The beam-emitting part and the operation indicator (orange) will blink while the emission frequency is being set. (They light up steadily when emission frequency 0 is set.) The blinking cycle will change depending on the emission frequency which is selected. (Refer to the table below.)

Emission frequency	FX-101□		FX-102□		Combination for interference prevention function to be enabled	Light-emitting operation during setting (Note)
	Display	Response time	Display	Response time		
0	F- 0	250 μs or less	—	—	None	Lights up
1	F-01	450 μs or less	F-01	2.5 ms or less	F-02 , F-03 , F-04	Blinks extremely quickly
2	F-02	500 μs or less	F-02	2.8 ms or less	F-01 , F-03 , F-04	Blinks quickly
3	F-03	600 μs or less	F-03	3.2 ms or less	F-01 , F-02 , F-04	Blinks slowly
4	–	–	F-04	5.0 ms or less	F-01 , F-02 , F-03	Blinks extremely slowly

Note: The operation indicator (orange) will operate in the same way.

* The factory setting is emission frequency 0 for the **FX-101**□ and emission frequency 1 for the **FX-102**□.

5-2. Teaching

The 'threshold value' can be set by utilizing three kinds of teaching, whichever '2-level teaching', 'limit teaching [+, −]' or 'full-auto teaching'.

Make sure that detection may become unstable if less margin is applied in the use environment when teaching.

2-level Teaching

This is the method of setting the threshold value by teaching two levels, corresponding to object present and object absent conditions. Normally, setting is done by this method.
The output operation setting of Light-ON or Dark-ON is reflected automatically.

For output ON when in object present condition

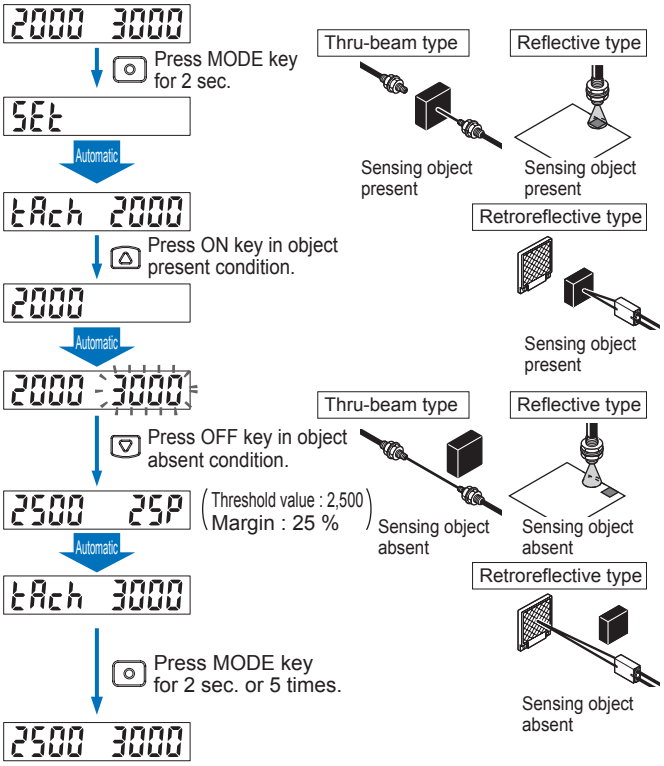

① Press the (MODE key) for 2 sec. to select 'SET mode'.

② Press (ON key) in object present condition.

③ The first incident light intensity is set and indicated on the green digital display.
(Cancellation of the setting for the first incident light intensity is possible when (MODE key) is pressed.)

④ The present incident light intensity is indicated on the red digital display with blinking.

⑤ Press (OFF key) in object absent condition.

⑥ The threshold value which is set between the first and the second incident light intensity is indicated on the green digital display. Margin (%) for the threshold value to the first or the second incident light intensity is indicated on the red digital display. When the margin is 200 % or more, 'FuLL' is displayed.

⑦ Press the (MODE key) 5 times or keep it pressed for 2 sec. or more, the amplifier will return to 'RUN mode' (normal sensing operation).

For output ON when in object absent condition

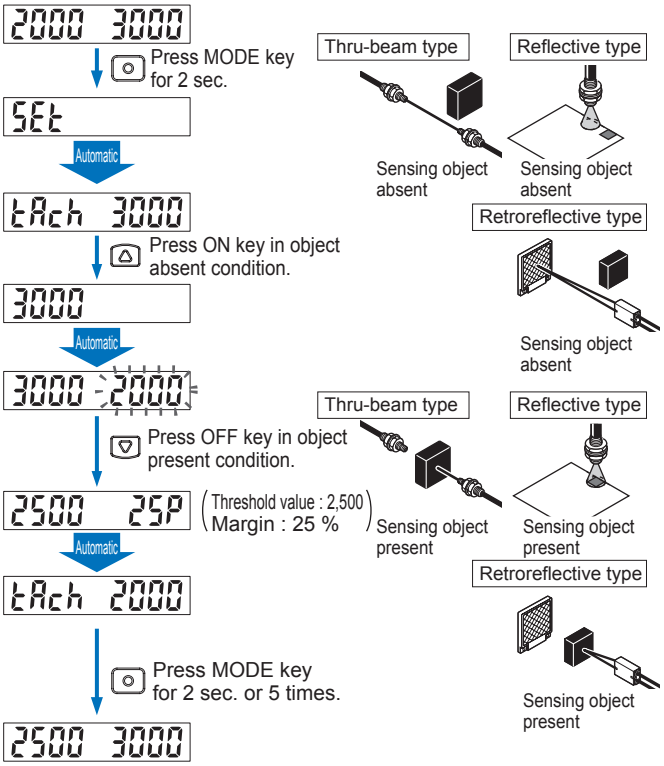

① Press the (MODE key) for 2 sec. to select 'SET mode'.

② Press (ON key) in object absent condition.

③ The first incident light intensity is set and indicated on the green digital display.
(Cancellation of the setting for the first incident light intensity is possible when (MODE key) is pressed.)

④ The present incident light intensity is indicated on the red digital display with blinking.

⑤ Press (OFF key) in object present condition.

⑥ The threshold value which is set between the first and the second incident light intensity is indicated on the green digital display. Margin (%) for the threshold value to the first or the second incident light intensity is indicated on the red digital display. When the margin is 200 % or more, 'FuLL' is displayed.

⑦ Press the (MODE key) 5 times or keep it pressed for 2 sec. or more, the amplifier will return to 'RUN mode' (normal sensing operation).

Limit Teaching [+, −]

This is the method of setting the threshold value by teaching only the object absent condition (stable incident light condition.) This is used for detection in the presence of a background body or for detection of minute objects.

When using thru-beam / retroreflective type fiber

Limit teaching [−] is carried out.

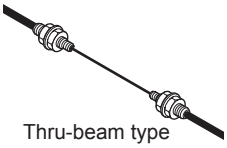

Thru-beam type

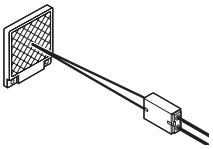

Retroreflective type

<Limit teaching [−] operations>

Operation 1 :
Press ▽ (OFF key) in object absent condition.
(Reference incident light intensity setting)

Operation 2 :
Press ▽ (OFF key) once more.
(Automatic threshold value setting)

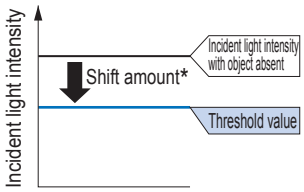

The reference incident light intensity is set in operation 1.

In operation 2, the threshold value is set to the reference incident light intensity with the shift amount* subtracted.

When using reflective fiber

Limit teaching [+] is carried out.

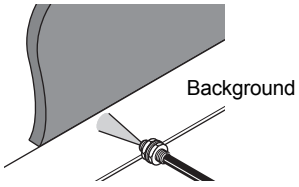

Reflective type

<Limit teaching [+] operations>

Operation 1 :
Press △ (ON key) in object absent condition.
(Reference incident light intensity setting)

Operation 2 :
Press △ (ON key) once more.
(Automatic threshold value setting)

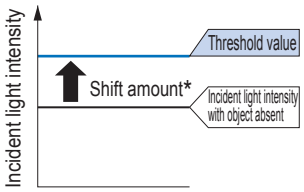

The reference incident light intensity is set in operation 1. In operation 2, the threshold value is set to the reference incident light intensity with the shift amount* subtracted.

* Shift amount: The factory setting is '15 %'. For the shift amount, refer to '**Shift Setting** (P.13, P.18)'.

In case of limit teaching [−]

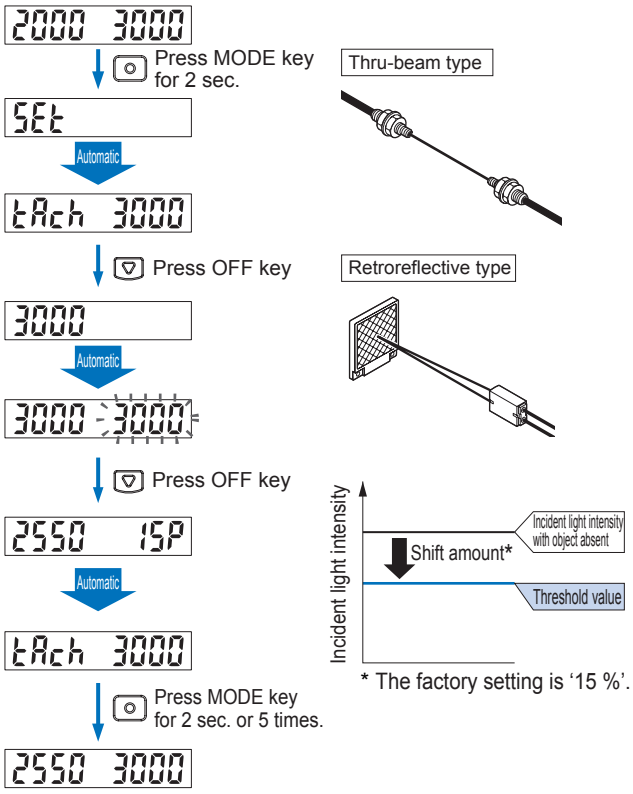

* The factory setting is '15 %'.

① Press the ◎ (MODE key) for 2 sec. to select 'SET mode'.

② Press ▽ (OFF key) in object absent condition.
Reference incident light intensity is set and indicated on the green digital display. The present incident light intensity is indicated on the red digital display with blinking.
(Cancellation of the setting for the reference incident light intensity is possible when ◎ (MODE key) is pressed.)

③ Press ▽ (OFF key) once more.
The incident light intensity at this time has no relationship to the threshold value.
The set threshold value is indicated on the green digital display. Margin (%) for the threshold value to the incident light intensity is indicated on the red digital display. When the margin is 200 % or more, 'FuLL' is displayed.

④ Press the ◎ (MODE key) 5 times or keep it pressed for 2 sec. or more, the amplifier will return to 'RUN mode' (normal sensing operation).

In case of limit teaching [+]

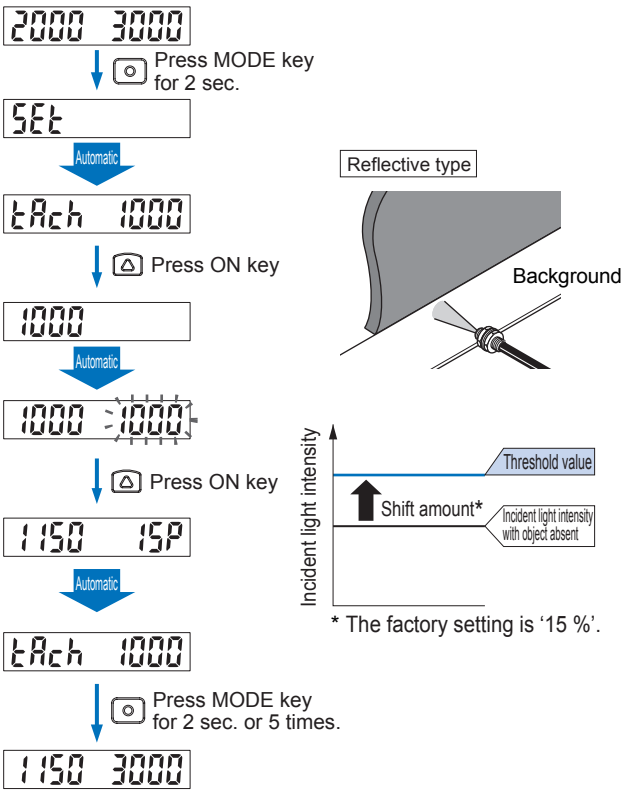

① Press the (MODE key) for 2 sec. to select 'SET mode'.

② Press (ON key) in object absent condition.
Reference incident light intensity is set and indicated on the green digital display. The present incident light intensity is indicated on the red digital display with blinking.
(Cancellation of the setting for the reference incident light intensity is possible when (MODE key) is pressed.)

③ Press (ON key) once more.
The incident light intensity at this time has no relationship to the threshold value.
The set threshold value is indicated on the green digital display. Margin (%) for the threshold value to the incident light intensity is indicated on the red digital display. When the margin is 200 % or more, 'FuLL' is displayed.

④ Press the (MODE key) 5 times or keep it pressed for 2 sec. or more, the amplifier will return to 'RUN mode' (normal sensing operation).

Full-Auto Teaching

Full-auto teaching is used when it is desired to set the threshold value without stopping the assembly line, with the object in the moving condition.

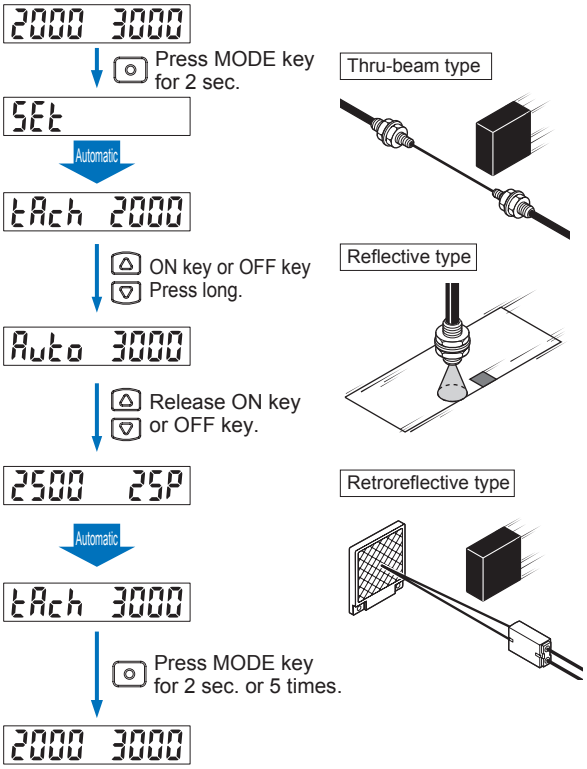

① Press the (MODE key) for 2 sec. to select 'SET mode'.

② Press (ON key) or (OFF key) long.

③ 'Auto' appears in the green digital display after 2 sec. approx., and starts sampling incident light intensity from that point.
The threshold value is set when (ON key) or (OFF key) is releassed.
The set threshold value is indicated on the green digital display. Margin (%) for the threshold value to the incident light intensity is indicated on the red digital display. When the margin is 200 % or more, 'FuLL' is displayed.

④ Press the (MODE key) 5 times or keep it pressed for 2 sec. or more, the amplifier will return to 'RUN mode' (normal sensing operation).

5-3. Output Operation Setting

Factory setting: L_d d_on

Light-ON or Dark-ON can be set.

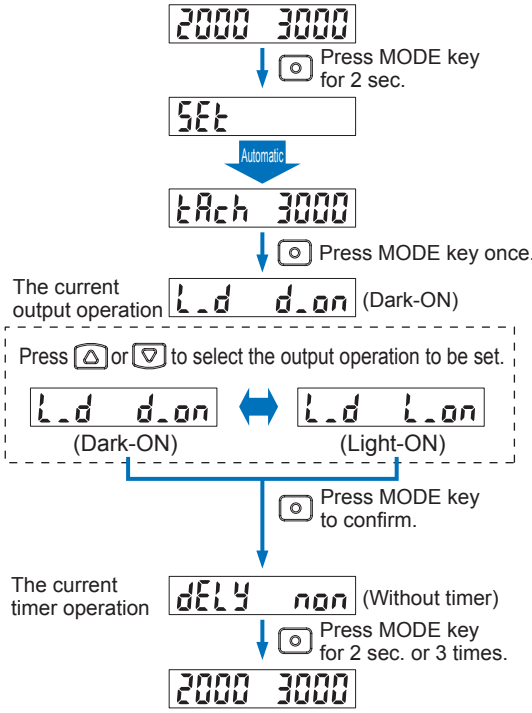

① Press the (MODE key) for 2 sec. to select 'SET mode'.

② Press the (MODE key) once to select 'output operation setting mode'.

③ Press (setting value UP key) or (setting value DOWN key) to select the output operation to be set.

④ Press (MODE key) to confirm the setting.

* After the setting is confirmed, operation will move to 'timer operation setting'. To continue with setting timer operation, carry out the procedure from step ③ of '**5-4. Timer Operation Settings**' (p.10). In addition, to carry out any other basic settings, press (MODE key) to select the setting item.

⑤ Press the (MODE key) 3 times or keep it pressed for 2 sec. or more, the amplifier will return to 'RUN mode' (normal sensing operation).

5-4. Timer Operation Setting

Factory setting: dELY non

This mode sets the timer operation and timer period. Without timer, ON-delay timer, or OFF-delay timer can be set. In case of setting ON-delay timer or OFF-delay timer in the timer operation setting mode, timer period can be set.

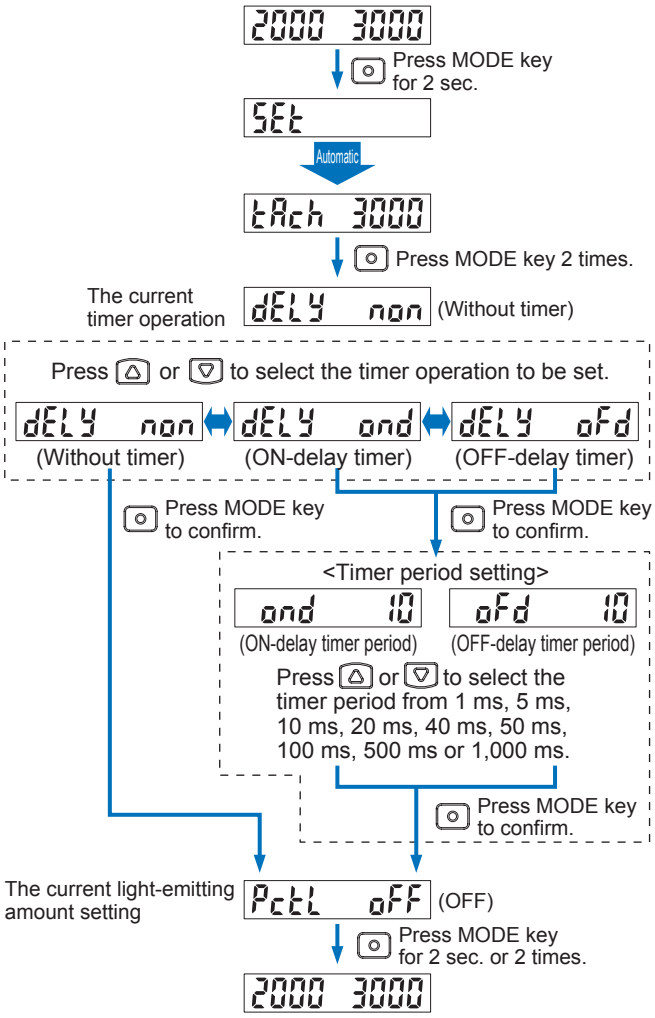

① Press the (MODE key) for 2 sec. to select 'SET mode'.

② Press the (MODE key) 2 times to select 'timer setting mode'.

③ Press (setting value UP key) or (setting value DOWN key) to select the timer operation to be set.

④ Press (MODE key) to confirm the setting.

<In case of setting ON-delay timer or OFF-delay timer>
The current timer period will be indicated.

⑤ Press (setting value UP key) or (setting value DOWN key) to select the timer operation to be set.

⑥ Press (MODE key) to confirm the setting.

* After the setting is confirmed, operation will move to 'light-emitting amount selection setting'.To continue with setting light-emitting amount selection, carry out the procedure from step ③ of '**5-5. Light-emitting Amount Selection Settings**' (p.11). In addition, to carry out any other basic settings, press (MODE key) to select the setting item.

⑦ Press the (MODE key) 2 times or keep it pressed for 2 sec. or more, the amplifier will return to 'RUN mode' (normal sensing operation).

5-5. Light-emitting Amount Selection Setting

Factory setting: PctL oFF

Allows light reduction to be set for the light-emitting amount.
Use this setting if sensing is difficult because the incident light intensity is saturated (4,000 or higher).

> If the incident light intensity is still saturated (4,000 or higher) even when the light reduction setting 'PctL on' is used, make the distance between the sensing objects and the fiber head longer.

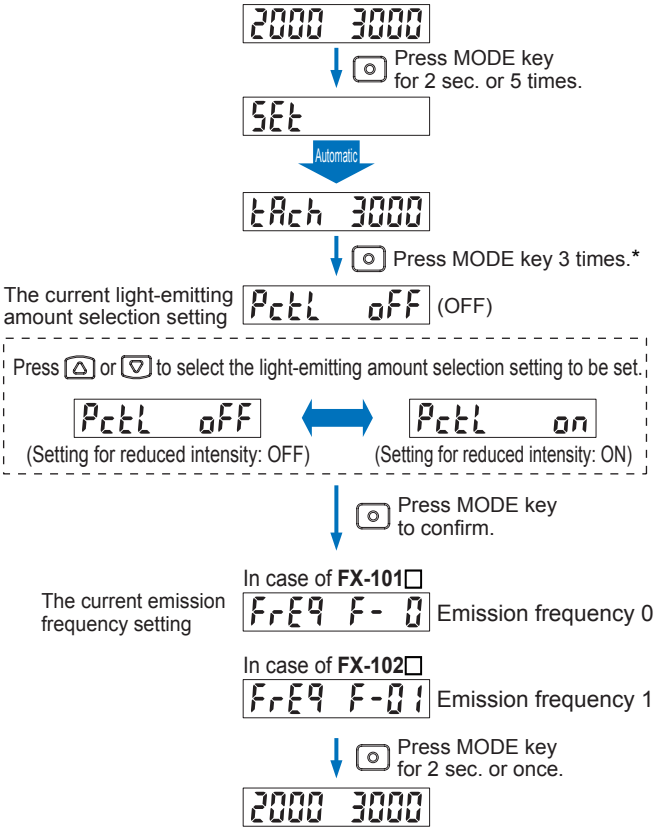

① Press the (MODE key) for 2 sec. to select 'SET mode'.

② Press the (MODE key) 3 times* to select 'light-emitting amount selection setting'.
* Press 4 times when setting the ON-delay timer or the OFF-delay timer.

③ Press (setting value UP key) or (setting value DOWN key), and then select 'PctL on' (setting for reduced intensity: ON) to set light reduction.

④ Press (MODE key) to confirm the setting.
* After the setting is confirmed, operation will move to 'emission frequency setting'. To continue with setting emission frequency, carry out the procedure from step ③ of '**5-6. Emission Frequency Setting**' (p.12). In addition, to carry out any other basic settings, press (MODE key) to select the setting item.

⑤ Press the (MODE key) once or keep it pressed for 2 sec. or more, the amplifier will return to 'RUN mode' (normal sensing operation).

5-6. Emission Frequency Setting

Factory setting: **FX-101□** FrEq F- 0, **FX-102□** FrEq F-01

When fiber heads are used side-by-side, the emission frequencies for each amplifier can be set to different frequencies in order to prevent interference.

- For the **FX-101□**, the interference prevention function will not operate for emission frequency 0 (factory setting).
- The response time will change when the emission frequency is changed.

2000 3000

↓ Press MODE key for 2 sec.

SEt

Automatic

tAch 3000

↓ Press MODE key 4 times.*

The current emission frequency setting

In case of **FX-101□**

FrEq F- 0 Emission frequency 0

In case of **FX-102□**

FrEq F-01 Emission frequency 1

① Press the (MODE key) for 2 sec. to select 'SET mode'.

② Press the (MODE key) 4 times* to select the 'emission frequency setting'.

* Press 5 times when setting the ON-delay timer or the OFF-delay timer.

Press (setting value UP key) or (setting value DOWN key) to select the emission frequency to be set.

In case of **FX-101□** : Select emission frequency from 'F- 0', 'F-01', 'F-02', 'F-03'

In case of **FX-102□** : Select emission frequency from 'F-01', 'F-02', 'F-03', 'F-04'

Emission frequency	FX-101□		FX-102□		Combination for interference prevention function to be enabled	Light-emitting operation during setting
	Display	Response time	Display	Response time		
0	F- 0	250 μs or less	—	—	None	Lights up
1	F-01	450 μs or less	F-01	2.5 ms or less	F-02, F-03, F-04	Blinks extremely quickly
2	F-02	500 μs or less	F-02	2.8 ms or less	F-01, F-03, F-04	Blinks quickly
3	F-03	600 μs or less	F-03	3.2 ms or less	F-01, F-02, F-04	Blinks slowly
4	–	–	F-04	5.0 ms or less	F-01, F-02, F-03	Blinks extremely slowly

Note: The operation indicator (orange) will operate in the same way.

③ Press (setting value UP key) or (setting value DOWN key) to select the emission frequency to be set.

The operation indicator and the beam-emitting part blink while setting emission frequency. (When emission frequency 0 is set, they light up.) The blinking cycle depends on each emission frequency. (Refer to the table at left.)

↓ Press MODE key to confirm.

2000 3000

④ Press (MODE key) to confirm the setting.
After the setting is confirmed, operation will return to 'RUN mode' (normal sensing operation).

6 PRO Mode

6-1. PRO Mode Functions and Settings

PRO mode is the mode used for making detailed settings. There are nine items that can be set.

SHFt : Shift Setting

Refer to p.18 for setting procedure

Shift amount can be selected from 0 to 80 % (1 % intervals) in the limit teaching [+, −] and the threshold value follow-up cycle setting.
Select 0 % when it is desired to set the present incident light intensity as a threshold value.
* The factory setting is '15 %'.

InPt : External Input Setting

Refer to p.18 for setting procedure

External input can be selected from emission halt, limit teaching [+], limit teaching [−], full-auto teaching, and ECO.
* The factory setting is 'emission halt'.

- Note that when set to ECO, key operations are disabled during external input.
- If 'E-oF' and '0' (incident light intensity) are blinking alternately in the digital displays, check if there is a contact between the output wire (black) and the external input wire (white).

[I/O circuits and external input conditions]

<NPN output type>

Terminal arrangement diagram

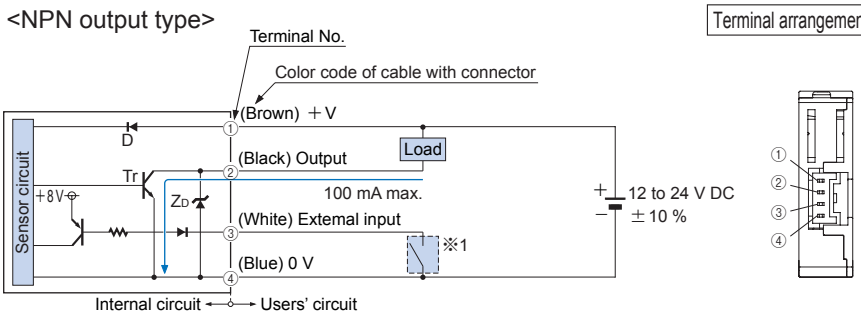

※1

Non-voltage contact or NPN open-collector transistor

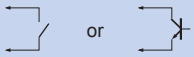

High (+8 V to +V DC or open): Ineffective
Low [0 to +2 V DC (source current 0.5 mA or less)] : Effective

- External input
  Input impedance: 10 kΩ approx.

<PNP output type>

Terminal arrangement diagram

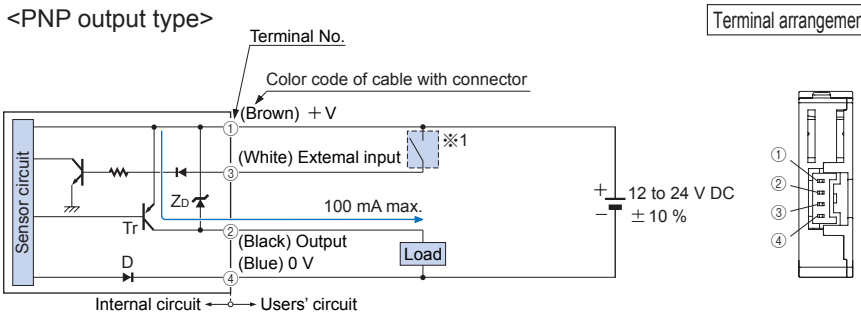

※1

Non-voltage contact or PNP open-collector transistor

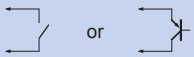

High [+4 V to +V DC (sink current 0.5 to 3 mA)]: Effective
Low (0 to +0.6 V DC or open): Ineffective

- External input
  Input impedance: 10 kΩ approx.

Time chart

If emission halt (E.oF) is selected

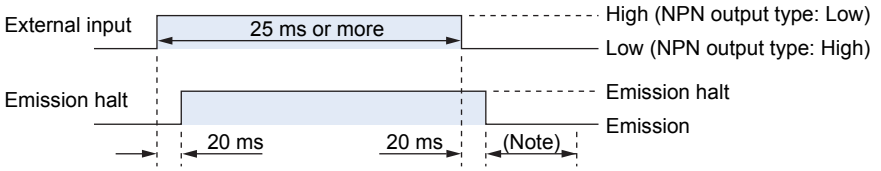

Note: Output operation will be undetermined only during the response time.
If the output signal is received by something such as a PLC, set the timer to a value of 20 ms + fiber sensor response time or greater.
Example: For the **FX-101**□ with emission frequency 0 (response time 250 μs or less)
Timer period: 20 ms + 0.25 ms (250 μs) = 20.25 ms

If limit teaching (LtcP, Ltc-) is selected

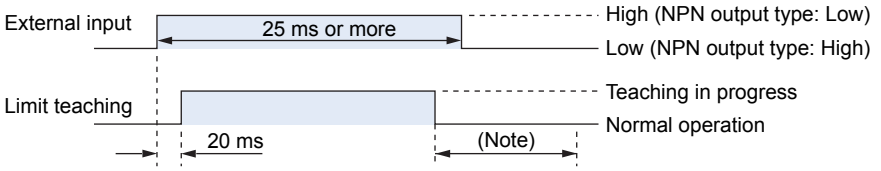

Note: After teaching is complete, output operation will be undetermined only during the response time.
If the output signal is received by something such as a PLC, set the timer to the fiber sensor response time or greater.
The threshold value will be set based on the incident light intensity at the instant when teaching is verified.

If full-auto teaching (Auto) is selected

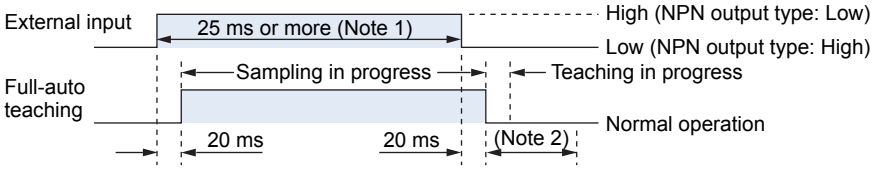

Notes: 1) Move the sensing object past once during the time that the input signal is being input.
2) After teaching is complete, output operation will be undetermined only during the response time.
If the output signal is received by something such as a PLC, set the timer to the fiber sensor response time or greater.

If ECO (Eco) is selected

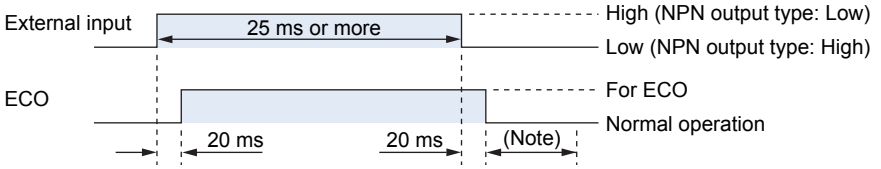

Note: Output operation will be undetermined only during the response time.
If the output signal is received by something such as a PLC, set the timer to a value of 20 ms + fiber sensor response time or greater.
Example: For the **FX-101**□ with emission frequency 0 (response time 250 μs or less)
Timer period: 20 ms + 0.25 ms (250 μs) = 20.25 ms

CYcL : Threshold Value Follow-up Cycle Setting

Refer to p.19 for setting procedure

Follow-up of the threshold value can be carried out within a set range (shift amount) in response to fluctuations in the incident light intensity. The threshold value follow-up operation functions by setting the time for refreshing of the threshold value. At this time, the threshold value at the time of the refresh is indicated on the green digital display.
However, the threshold value is not stored. (The threshold value returns to the original value when the power is turned off.)

[Usage conditions]
This is enabled when thru-beam type fibers or retroreflective type fibers are being used and output operation is set to Dark-ON.

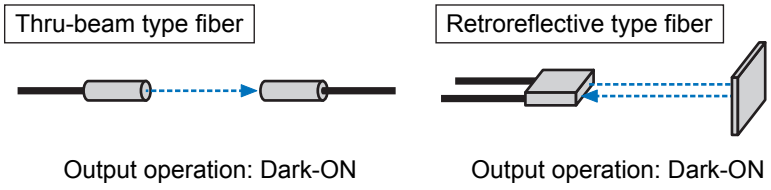

* If output operation is set to Light-ON, the threshold value is not refreshed.

The threshold value follow-up cycle can be set to between 1 to 59 sec. (1-sec. intervals), 1 to 9 min. (1-min. intervals) and 10 to 60 min. (10-min. intervals).
The incident light intensity is checked and the threshold value is reset each time after the threshold value follow-up cycle which has been set.
However, the threshold value is not stored.
The shift amount for follow-up is the shift amount which has been set according to '**6-2. Shift setting**' (p.18).
Shift amount: Can be set to between 0 to 80 % (1 % intervals).
(The factory setting is '15 %'.)

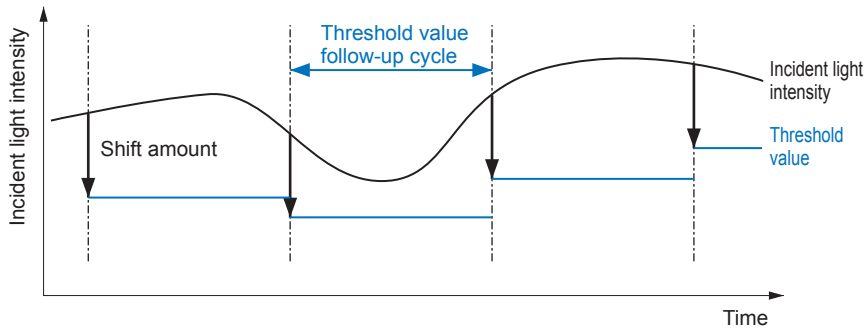

When threshold value follow-up operation is being carried out, the follow-up operation stops when the incident light intensity drops to 300 or lower.
At this time, the threshold value blinks in the digital display (green).

<Graph showing long-term follow-up>

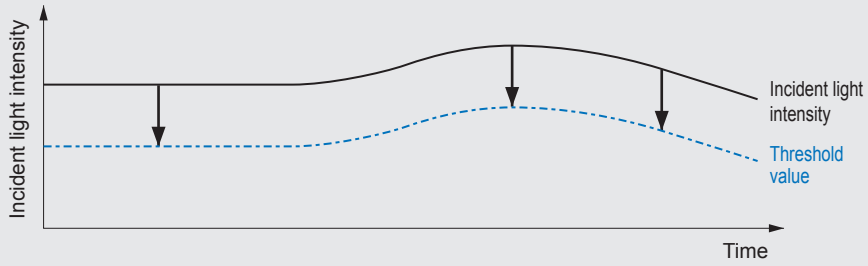

* The factory setting is 'OFF'.

GEtA : GETA Function Setting

Refer to p.20 for setting procedure

The display value for the incident light intensity can be offset by the desired value (target value).
The target value can be set to between 0 and 2,000 (in intervals of 100).
For example, if the incident light intensity is 1,500 and the target value is set to 2,000, then the value appearing in the digital display will be 2,000.

- If you press (MODE key) during RUN mode when using the GETA function, the incident light intensity before the GETA function was used will be indicated on the red digital display for 2 sec.
- If this function is used while the incident light intensity is saturated (4,000 or higher), ‘ HArd ’ will be indicated on the red digital display. The maximum offset value is 4,000.

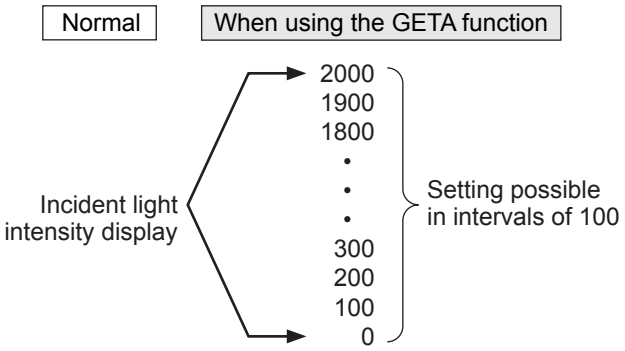

Example 1: Setting an incident light intensity display of ‘ 500 ’ to display as ‘ 1000 ’

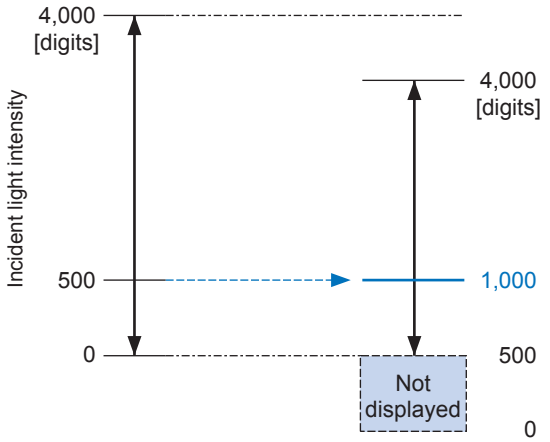

Because the original value is 500, the displays for the lower limit value will be 500 and the upper limit value will be 4,000.

Example 2: Setting an incident light intensity display of ‘ 500 ’ to display as ‘ 0 ’ (0-adjust)

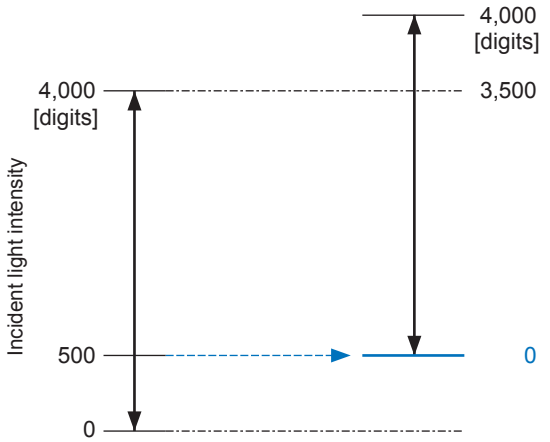

Because the original value is 0, the displays for the lower limit value will be 0 and the upper limit value will be 4,000.

* The factory setting is ‘GETA OFF’.

Eco : ECO Setting

Refer to p.21 for setting procedure

The digital display can be set to turn off in order to reduce power consumption (current consumption). When the ECO setting has been set to ON, ‘Eco’ will blink if no keys have been pressed for approx. 20 sec. while in RUN mode, and then the digital display will switch off.
To switch the digital display back on again, press and hold any one of the three keys for 2 sec. or more.
* The factory setting is ‘ECO OFF’.

Note that key operations will be invalid if the ECO setting has been set by means of external input.

●ECO OFF

Power consumption

720 mW or less
(Current consumption 30 mA or less at 24 V supply voltage)

●ECO ON

Power consumption

600 mW or less
(Current consumption 25 mA or less at 24 V supply voltage)

turn : Digital Display Inversion Setting

Refer to p.22 for setting procedure

The viewing orientation of the digital display can be inverted in accordance with the mounting direction of the amplifier.
* The factory setting is ‘Turn OFF’.

●Turn OFF

●Turn ON

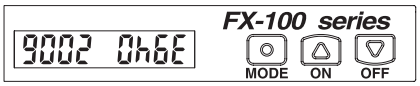

ALrt : Threshold Value Margin Setting

Refer to p.22 for setting procedure

Margin for threshold value to the present incident light intensity can be checked. When there is no margin, it is possible to make the digital display blink. The incident light intensity when the display starts blinking will be approximately half of the shift amount. [For the shift amount, refer to ‘**Shift setting** (p.13, p.18)’.]

<If using a shift amount of 20 % and a threshold value of 1,000>

The incident light intensity range that will cause the digital display to blink will be from approx. 900 to approx. 1,100.

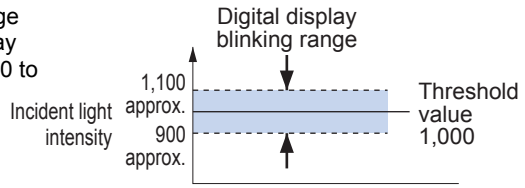

The blinking method for the digital display can be selected from blinking green (threshold value blinks), blinking red (incident light intensity blinks) and blinking green and red simultaneously (threshold value and incident light intensity blink simultaneously).
* The factory setting is ‘OFF’.

CoPY : Setting Copy

Refer to p.23 for setting procedure

The settings of the master side amplifier can be copied to the slave side amplifier.
The copying method used is data communication by means of connected wiring.
For details on the setting procedure and wiring, refer to p.23.
* The factory setting is ‘Do not copy settings (Copy NO)’.

- Be sure to use the setting copy function between the identical models (for all **FX-101**□ units or all **FX-102**□ units). This function cannot be used between different models.
- Only one amplifier can be connected on slave side with a master side amplifier for the setting copy function. If copying to more than one unit, make the settings for one unit at a time.
- ‘Threshold value’, ‘output operation setting’, ‘timer operation setting’, ‘timer period setting’, ‘light-emitting amount selection setting’, ‘shift setting’, ‘ECO setting’, ‘digital display inversion setting’, and ‘threshold value margin setting’ can be copied.

rSEt : Reset

Refer to p.24 for setting procedure

All settings can be returned to factory settings.
For details on the default values for factory settings, refer to p.3.
* The factory setting is ‘Do not reset (Reset NO)’.

6-2. Shift Setting

Factory setting: SHFt 15P

Shift amount during limit teaching [+, −] and threshold value follow-up cycle setting can be selected from 0 to 80 % (1 % intervals). Select 0 % when it is desired to set the present incident light intensity as a threshold value.

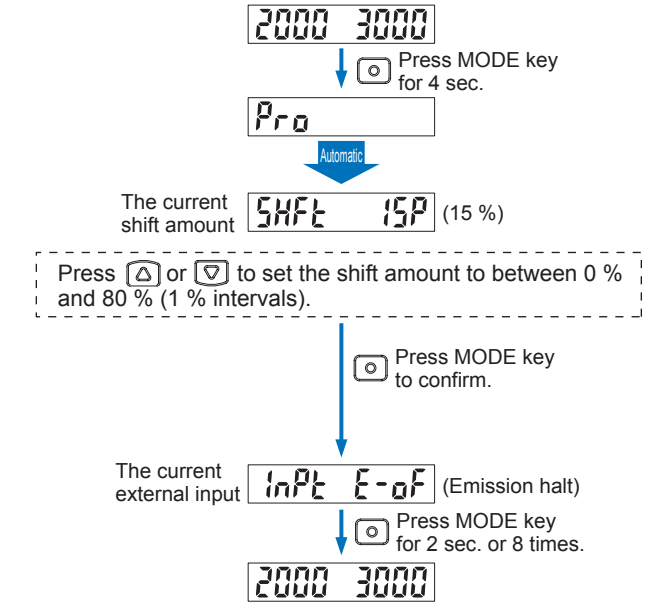

① Press the (MODE key) for 4 sec. to select 'PRO mode'.

② Press (setting value UP key) or (setting value DOWN key) to select the shift amount to be set.

③ Press (MODE key) to confirm the setting.

* After the setting is confirmed, operation will move to 'external input setting'. To continue with setting external input, carry out the procedure from step ③ of '**6-3. External Input Setting**' (p.18). In addition, to carry out any other basic settings, press (MODE key) to select the setting item.

④ Press the (MODE key) 8 times or keep it pressed for 2 sec. or more, the amplifier will return to 'RUN mode' (normal sensing operation).

6-3. External Input Setting

Factory setting: InPt E-oF

External input can be selected from emission halt, limit teaching [+], limit teaching [−], full-auto teaching, and ECO.

- Note that when set to ECO, key operations are disabled during external input.
- If 'E-oF' and '0' (incident light intensity) are blinking alternately in the digital displays, check if there is a contact between the output wire (black) and the external input wire (white).

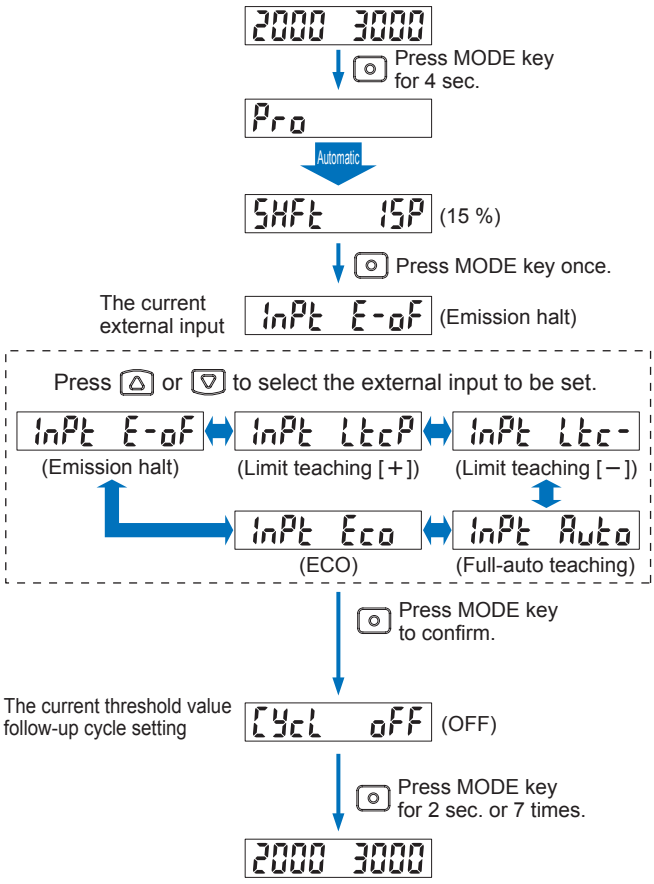

① Press the (MODE key) for 4 sec. to select 'PRO mode'.

② Press the (MODE key) once to select 'external input setting'.

③ Press (setting value UP key) or (setting value DOWN key) to select the external input to be set.

④ Press (MODE key) to confirm the setting.

* After the setting is confirmed, operation will move to threshold value 'follow-up cycle setting'. To continue with setting threshold value follow-up cycle, carry out the procedure from step ③ of '**6-4. Threshold Value Follow-up Cycle Setting**' (p.19). In addition, to carry out any other basic settings, press (MODE key) to select the setting item.

⑤ Press the (MODE key) 7 times or keep it pressed for 2 sec. or more, the amplifier will return to 'RUN mode' (normal sensing operation).

6-4. Threshold Value Follow-up Cycle Setting

Factory setting: CYcL oFF

Follow-up of the threshold value can be carried out within a set range (shift amount) in response to fluctuations in the incident light intensity. The threshold value follow-up operation functions by setting the time for refreshing of the threshold value. However, the threshold value is not stored.
The shift amount for follow-up is the shift amount which has been set according to '**6-2. Shift Setting**' (p.18).

> When threshold value follow-up operation is being carried out, the follow-up operation stops when the incident light intensity drops to 300 or lower.
> At this time, the threshold value blinks in the digital display (green).

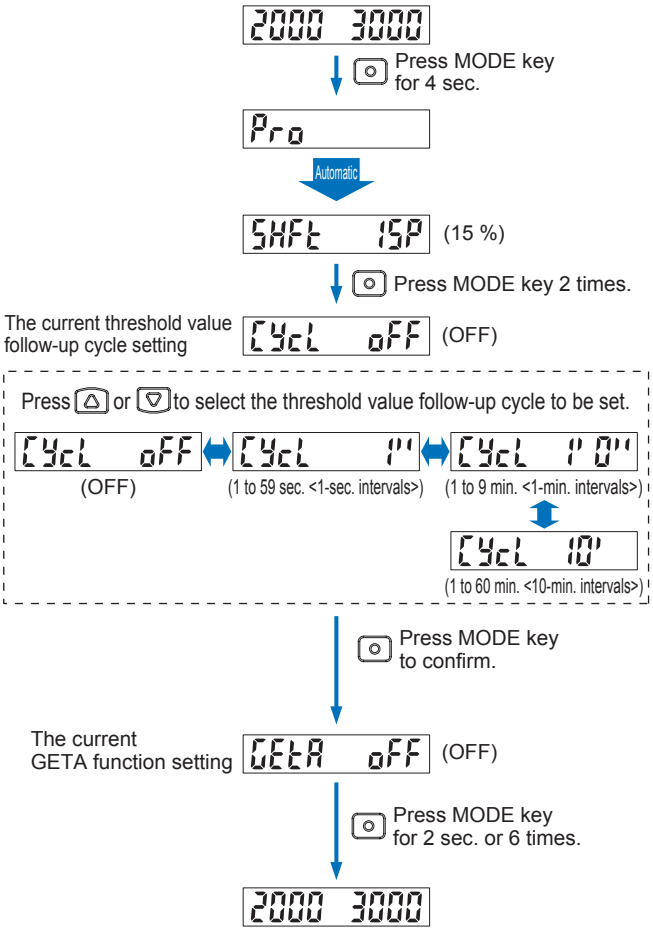

① Press the (MODE key) for 4 sec. to select 'PRO mode'.

② Press the (MODE key) 2 times to select 'Threshold value follow-up cycle setting'.

③ Press (setting value UP key) or (setting value DOWN key) to select the threshold value follow-up cycle to be set.

④ Press (MODE key) to confirm the setting.
* After the setting is confirmed, operation will move to 'GETA function setting'. To continue with setting GETA function, carry out the procedure from step ③ of '**6-5. GETA Function Setting**' (p.20). In addition, to carry out any other basic settings, press (MODE key) to select the setting item.

⑤ Press the (MODE key) 6 times or keep it pressed for 2 sec. or more, the amplifier will return to 'RUN mode' (normal sensing operation).

6-5. GETA Function Setting

Factory setting: GETA oFF

The display value for the incident light intensity can be offset by the desired value (target value).
The target value can be set to between 0 and 2,000 (100 intervals).
For example, if the incident light intensity is 1,500 and the target value is set to 2,000, then the value appearing in the digital display will be 2,000.

- If you press (MODE key) during RUN mode when using the GETA function, the incident light intensity before the GETA function was used will be indicated on the red digital display for 2 sec.
- If this function is used while the incident light intensity is saturated (4,000 or higher), ' HArd ' will be indicated on the red digital display. The maximum offset value is 4,000.

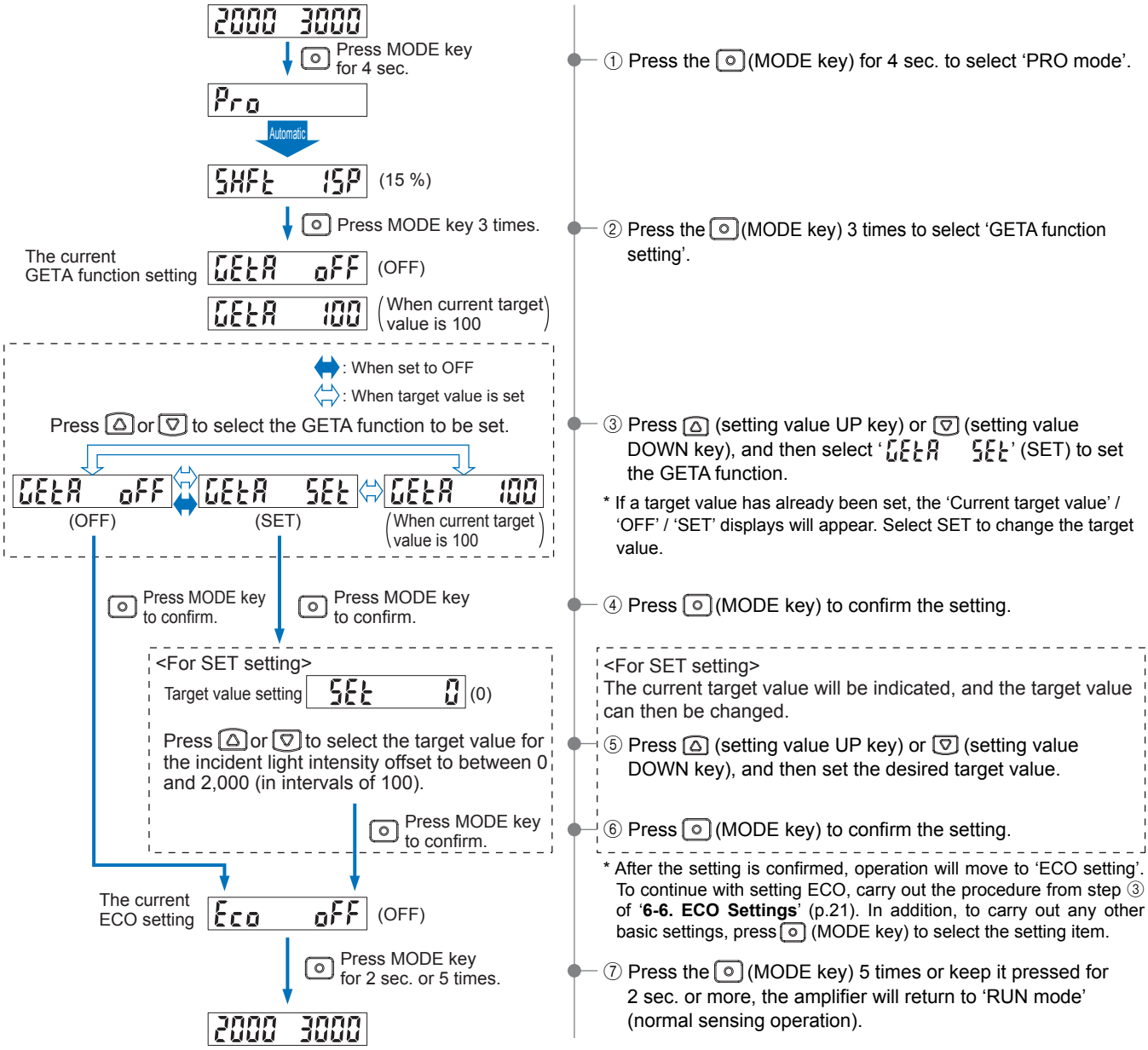

6-6. ECO Setting

Factory setting: Eco oFF

The digital display can be set to turn off in order to reduce power consumption (current consumption). When the ECO setting has been set to ON, 'Eco' will blink if no keys have been pressed for approx. 20 sec. while in RUN mode, and then the digital display will turn off.
To switch the digital display back on again, press and hold any one of the three keys for 2 sec. or more.

Note that key operations will be invalid if the ECO setting has been set by means of external input.

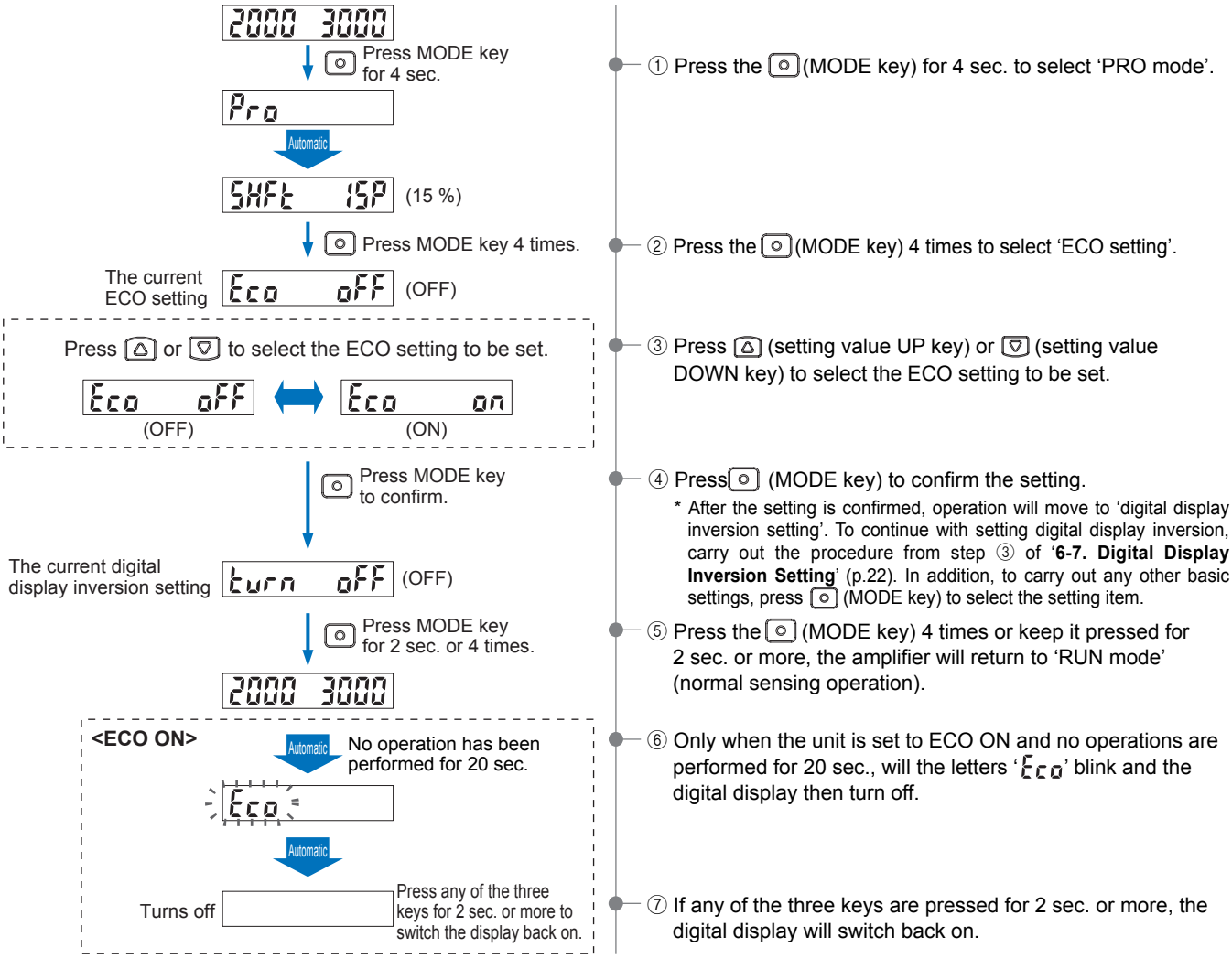

6-7. Digital Display Inversion Setting

Factory setting: turn oFF

The viewing orientation of the digital display can be inverted in accordance with the setting direction of the amplifier. If the digital display inversion setting has been set to ON, the display will be inverted.

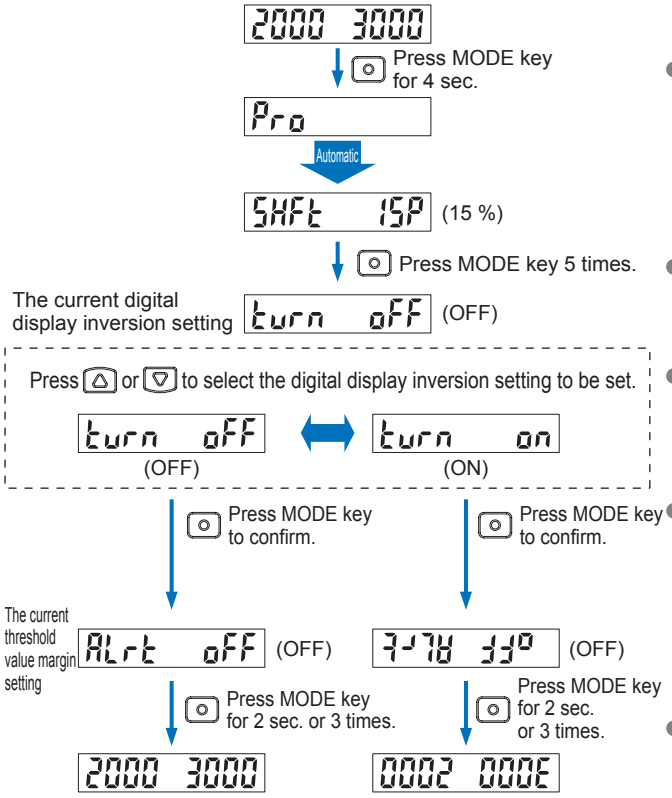

① Press the (MODE key) for 4 sec. to select 'PRO mode'.

② Press the (MODE key) 5 times to select 'digital display inversion setting'.

③ Press (setting value UP key) or (setting value DOWN key) to select the digital display inversion setting to be set.

④ Press (MODE key) to confirm the setting.
If 'turn ON' is set, the display will be inverted.

Display of the threshold value in green and display of the incident light intensity in red will remain unchanged.

* After the setting is confirmed, operation will move to 'threshold value margin setting'. To continue with setting threshold value margin, carry out the procedure from step ③ of '**6-8. Threshold Value Margin Setting**' (p.22). In addition, to carry out any other basic settings, press (MODE key) to select the setting item.

⑤ Press the (MODE key) 3 times or keep it pressed for 2 sec. or more, the amplifier will return to 'RUN mode' (normal sensing operation).

6-8. Threshold Value Margin Setting

Factory setting: ALrt oFF

Margin for threshold value to the present incident light intensity can be checked. When there is no margin, it is possible to make the digital display blink. The incident light intensity when the display starts blinking will be approximately half of the shift amount. For the shift amount, refer to '**Shift setting** (p.13, p.18)'. The blinking method for the digital display can be selected from blinking green (threshold value blinks), blinking red (incident light intensity blinks) and blinking green and red simultaneously (threshold value and incident light intensity blink simultaneously).

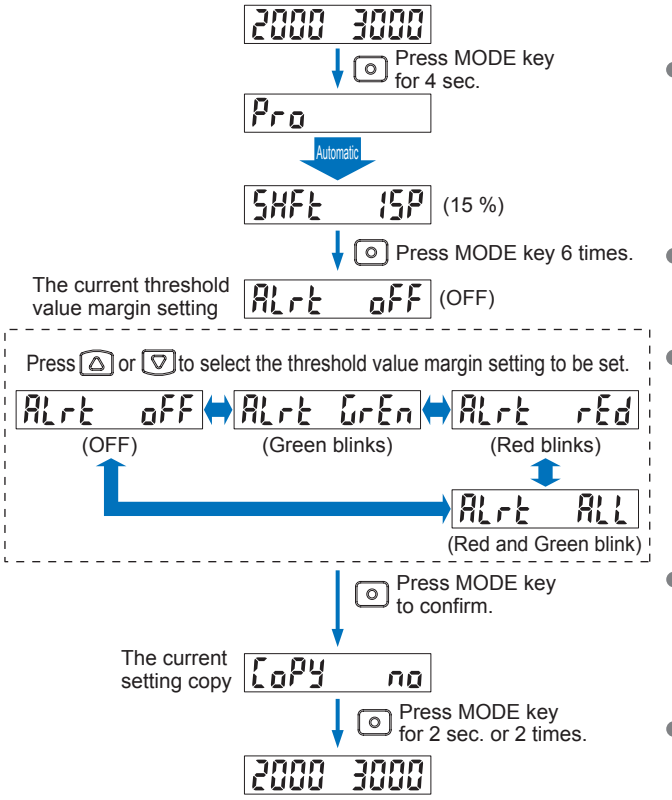

① Press the (MODE key) for 4 sec. to select 'PRO mode'.

② Press the (MODE key) 6 times to select 'Threshold value margin setting'.

③ Press (setting value UP key) or (setting value DOWN key) to select the threshold value margin setting to be set.

④ Press (MODE key) to confirm the setting.

* After the setting is confirmed, operation will move to 'setting copy'. To continue with setting copy, carry out the procedure from step ③ of '**6-9. Setting Copy**' (p.23). In addition, to carry out any other basic settings, press (MODE key) to select the setting item.

⑤ Press the (MODE key) 2 times or keep it pressed for 2 sec. or more, the amplifier will return to 'RUN mode' (normal sensing operation).

6-9. Setting copy

Factory setting: CoPY no

The settings of the master side amplifier can be copied to the slave side amplifier. Data communication will be carried out by means of connected wiring.

- Be sure to use the setting copy function between the identical models (for all **FX-101**□ units or all **FX-102**□ units). This function cannot be used between different models.
- Only one amplifier can be connected on slave side with a master side amplifier for the setting copy function. If copying to more than one unit, make the settings for one unit at a time.
- 'Threshold value', 'output operation setting', 'timer operation setting', 'timer period setting', 'light-emitting amount selection setting', 'shift setting', 'ECO setting', 'digital display inversion setting', and 'threshold value margin setting' can be copied.

2000 3000

Press MODE key for 4 sec.

Pro

Automatic

SHFt 15P (15 %)

Press MODE key 7 times.

CoPY no

① Press (MODE key) at the master amplifier for 4 sec. to switch to 'PRO mode'.

② Press the (MODE key) 7 times to select 'Setting copy'.

Press or to select 'Copy YES'.

CoPY no (ON) ⟷ CoPY YES (YES)

③ Press (setting value UP key) or (setting value DOWN key) to select 'CoPY YES'.

Press MODE key.

Copy ready state CoPY rEdY (READY)

④ Press (MODE key) to set to the copy ready state. If you press (MODE key) for 2 sec. or more while in the copy ready state, the copy ready state will be canceled and the amplifier will return to 'RUN mode' (normal sensing operation).

Turn power OFF during copy ready state (READY).

⑤ Turn off the power for the master side amplifier which is in copy ready state.

<Wiring for copy setting>

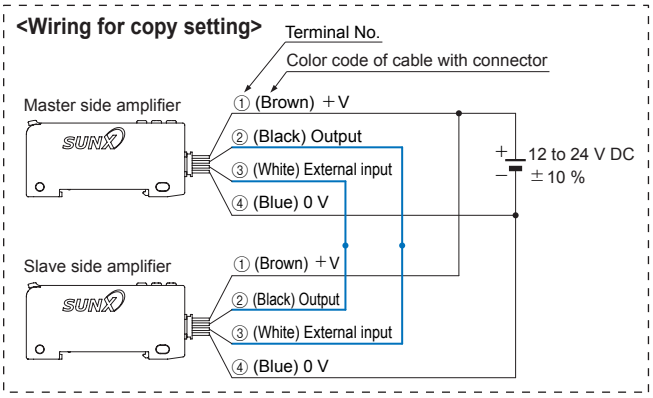

⑥ Connect the master side amplifier with the slave side amplifier as shown below.

Make sure that the power supply is off while wiring.

After wiring, turn power ON.

⑦ Turn on the master side amplifier and the slave side amplifier at the same time.

Take care that if the power is not turned on at the same time, the setting contents may not be copied.

<Copy communication in progress>

Master side amplifier: CoPY

4-digit code will be indicated.

Slave side amplifier: CoPY 1 → (Automatic) → CoPY 1111

'CoPY' is indicated on the green digital display of the master side amplifier 4-digit code is indicated on the red digital display of it, then the copying starts. While copying is in progress, 'CoPY' will be indicated on the green digital display of the slave side amplifier and the copy progress indicator ('1 ' → '11 ' → '111 ' → '1111') will be indicated on the red digital display.

When the copying is completed, 'Good' is indicated on the green digital display of the slave side amplifier. While 4-digit code (the same code as the master side amplifier) is indicated on the red digital display of it.

If communication error 'Er-5' is displayed, turn off the power and check the wiring.

<If copy is OK>

Slave side amplifier: Good

The same code as for master amplifier will be indicated.

<If error during copying>

Slave side amplifier: CoPY Er-5 Turn power OFF and check the wiring.

Turn power OFF and disconnect wiring.

⑧ Turn off the power of the master side amplifier and the slave side amplifier and disconnect the wire.

Make sure that the power supply is off while wiring.

* If copying settings to more than one amplifier, repeat steps ⑥ to ⑧.

To cancel the setting copy of the master side amplifier

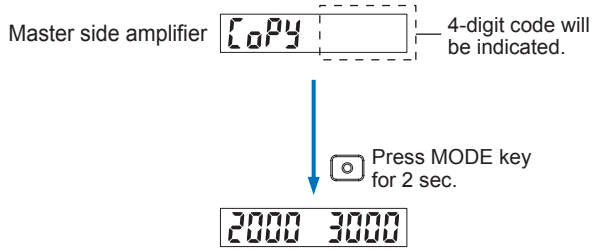

① Disconnect the wiring for both the master side amplifier and the slave side amplifier.

Make sure that the power supply is off while wiring.

② Turn on the power of the master side amplifier.

Check that the output wire (black) and the external input wire (white) for the master side amplifier are not contacting any other wires or terminals, and then turn on the power.

③ If (MODE key) is pressed for 2 sec., 'Copy Set' will be canceled and the amplifier will return to 'RUN mode' (normal sensing operation).

6-10. Reset

Factory setting: rSEt no

All settings can be returned to factory settings. For details on the default values for factory settings, refer to p.3.

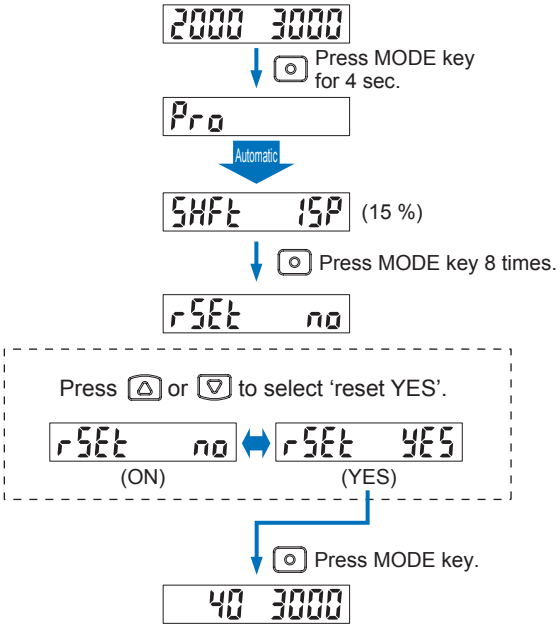

① Press the (MODE key) for 4 sec. to select 'PRO mode'.

② Press the (MODE key) 8 times to select 'reset'.

③ Press (setting value UP key) or (setting value DOWN key) to select 'rSEt YES'(YES).

To cancel, be sure to set to 'rSEt no' (NO).

③ If (MODE key) is pressed, all settings will return to the factory settings and the amplifier will return to 'RUN mode' (normal sensing operation).

7 Quick Setting Function

The quick setting function allows various settings (output operation setting, timer operation setting, light-emitting amount selection setting and emission frequency setting) to be made in SET mode simply by selecting a setting number. For the setting numbers, refer to '**Table of quick setting numbers**'.

When the present setting is out of the quick setting range, '-88-' is indicated on the green digital display. When '-88-' is selected, the set content is not changed.

2000 3000

Press setting value UP key and setting value DOWN key simultaneously for 2 sec.

9U 1C

Automatic

The current quick setting function -00- F-01 (For emission frequency 1 with quick setting number -00-)

(Quick setting)

<Quick setting>

Press △ or ▽ to select the quick setting number.

-00- F-01 ⇔ -09- F-01

Press MODE key to confirm.

-09- F-01 (When set to quick setting number -09-)

(Emission frequency setting)

<Emission frequency setting>

Press △ or ▽ to select the emission frequency to be set.

In case of **FX-101□** : Select emission frequency from 'F- 0', 'F-01', 'F-02', 'F-03'

In case of **FX-102□** : Select emission frequency from 'F-01', 'F-02', 'F-03', 'F-04'

Emission frequency	FX-101□		FX-102□		Combination for interference prevention function to be enabled	Light-emitting operation during setting (Note)
	Display	Response time	Display	Response time		
0	F- 0	250 μs or less	—	—	None	Lights up
1	F-01	450 μs or less	F-01	2.5 ms or less	F-02, F-03, F-04	Blinks extremely quickly
2	F-02	500 μs or less	F-02	2.8 ms or less	F-01, F-03, F-04	Blinks quickly
3	F-03	600 μs or less	F-03	3.2 ms or less	F-01, F-02, F-04	Blinks slowly
4	–	–	F-04	5.0 ms or less	F-01, F-02, F-03	Blinks extremely slowly

Note: The operation indicator (orange) will operate in the same way.

-09- F-02 (Emission frequency 2)

Press MODE key to confirm.

2000 3000

① Press △ (setting value UP key) or ▽ (setting value DOWN key) for 2 sec. to set to quick setting mode.

Note that if the button is pressed for 4 sec. or more, the code setting function will be enabled. To cancel, press ○ (MODE key) for 2 sec. or more.

② Press △ (setting value UP key) or ▽ (setting value DOWN key) to select the quick setting number to be set.

If you press ○ (MODE key) for 2 sec. or more before the quick setting number is confirmed, the setting will be canceled and the mode will return to 'RUN mode'.

③ Press ○ (MODE key) to confirm the quick setting number.

When the present setting is out of the quick setting range, '-88-' is indicated on the green digital display. When '-88-' is selected, the set content is not changed.

④ Press △ (setting value UP key) or ▽ (setting value DOWN key) to select the desired emission frequency.

The operation indicator and the beam-emitting part blink while setting emission frequency. (When emission frequency 0 is set, they light up.)

The blinking cycle depends on each emission frequency. (Refer to the table at left.)

- For the **FX-101□**, the interference prevention function will not operate for emission frequency 0 (factory setting).
- The response time will change when the emission frequency is changed.

⑤ Press ○ (MODE key) to confirm the emission frequency. After the setting is confirmed, operation will return to 'RUN mode' (normal sensing operation).

Table of quick setting numbers

No.	Output operation	Timer	Light-emitting amount selection
-00-	Dark-ON (D-ON)	non	OFF
-01-			ON
-02-		OFF-delay 10 ms	OFF
-03-			ON
-04-		OFF-delay 40 ms	OFF
-05-			ON
-06-		ON-delay 10 ms	OFF
-07-			ON
-08-		ON-delay 40 ms	OFF
-09-			ON

No.	Output operation	Timer	Light-emitting amount selection
-10-	Light-ON (L-ON)	ON-delay 40 ms	ON
-11-			OFF
-12-		ON-delay 10 ms	ON
-13-			OFF
-14-		OFF-delay 40 ms	ON
-15-			OFF
-16-		OFF-delay 10 ms	ON
-17-			OFF
-18-		non	ON
-19-			OFF

8 Code Setting Function

Settings for ‘output operation setting’, ‘timer operation setting’, ‘light-emitting amount selection setting’, ‘emission frequency setting’, ‘ECO setting’, ‘external input setting’, and ‘shift setting’ are possible by selecting codes discretionary. For the codes, refer to ‘**Code table**’.

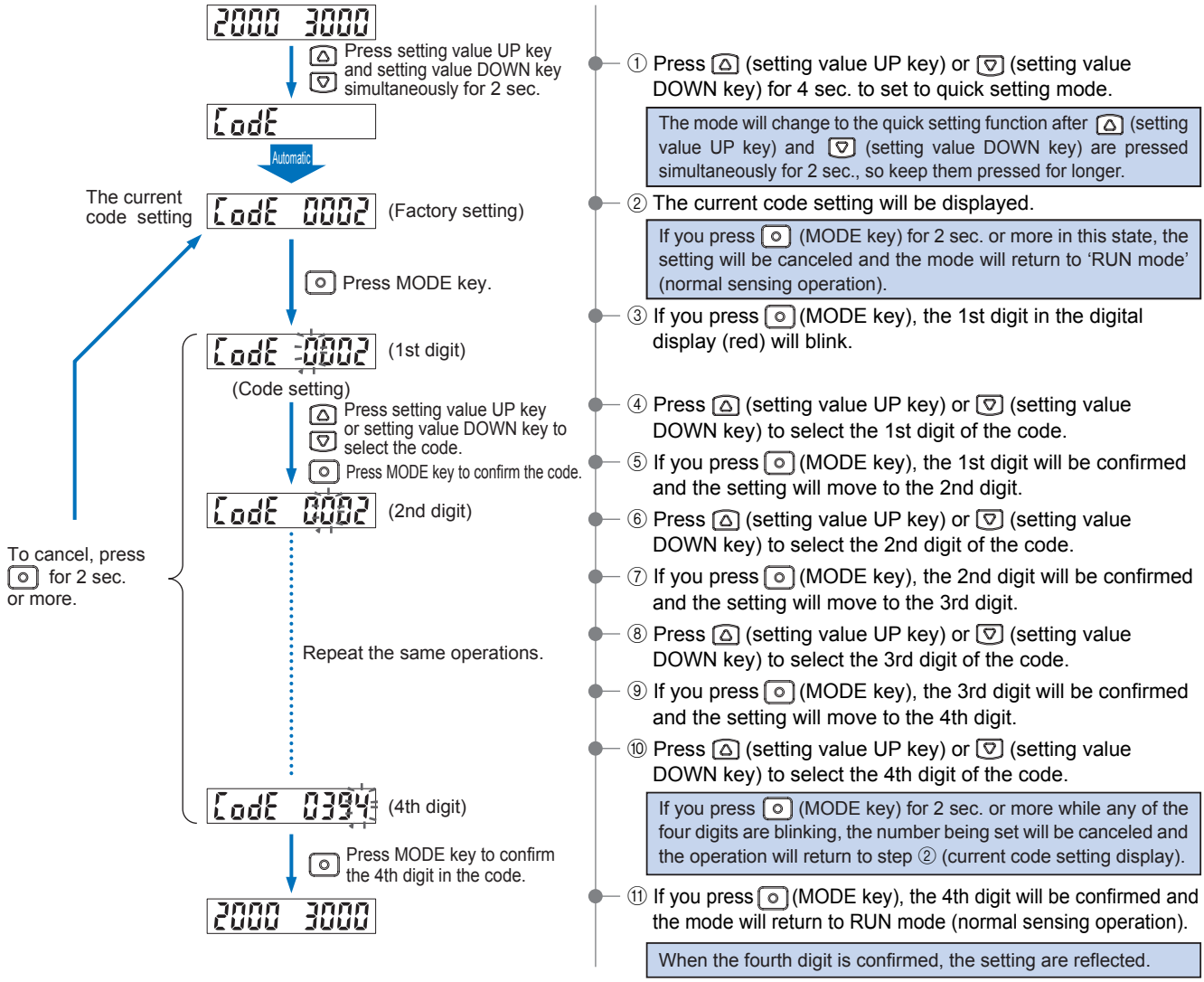

Code table

CodE 0002

Code	1st digit: Output operation	1st digit: Timer (Note 1)
0	Dark-ON (D-ON)	non
1		ON-delay 10 ms
2		ON-delay 40 ms
3		OFF-delay 10 ms
4		OFF-delay 40 ms
5	Light-ON (L-ON)	non
6		ON-delay 10 ms
7		ON-delay 40 ms
8		OFF-delay 10 ms
9		OFF-delay 40 ms

Code	2nd digit: Light-emitting amount selection	2nd digit: Emission frequency FX-101□	2nd digit: Emission frequency FX-102□
0	OFF	0	1
1		1	2
2		2	3
3		3	4
4	ON	0	1
5		1	2
6		2	3
7		3	4

Code	3rd digit: ECO	3rd digit: External input
0	OFF	Emission halt
1		Limit teaching [+]
2		Limit teaching [−]
3		Full-auto teaching
4		ECO
5	ON	Emission halt
6		Limit teaching [+]
7		Limit teaching [−]
8		Full-auto teaching
9		ECO

Code	4th digit: Shift amount (Note 1)
0	5 %
1	10 %
2	15 %
3	20 %
4	25 %
5	30 %
6	35 %
7	40 %
8	45 %
9	50 %

Notes: 1) When the present setting is out of the code setting range, ‘ - ’ is displayed. When ‘ - ’ is selected, the set content of the digit is not changed.
2) The factory setting is ‘0002’.

All information is subject to change without prior notice.

http://www.sunx.jp/

SUNX Limited
2431-1 Ushiyama-cho, Kasugai-shi, Aichi,
486-0901, Japan
Phone: +81-(0)568-33-7211
FAX: +81-(0)568-33-2631

Overseas Sales Dept.
Phone: +81-(0)568-33-7861
FAX: +81-(0)568-33-8591

No.PCE-GUIDEFX100 June, 2007