Electromagnetic Technology

KEB

U_{in} switching U_{vmax}	275 V AC +0% AC/DC 450 V	500 V AC +0% AC/DC 900 V	600 V AC +0% AC 1000 V	720 V AC +0% AC 1600 V
half wave [4] $U_{out} = 0{,}45 * U_{in}$ I_N (45 °C) = 1,0A I_N (80 °C) = 0,5A	**0291010-CE07** [2] 	**0491010-CE07** [3] 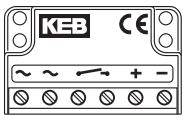	**0591010-CE09** [2] 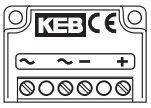	**0691010-CE09** [3] 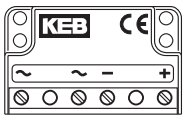
full wave [4] $U_{out} = 0{,}9 * U_{in}$ I_N (45 °C) = 2,0A I_N (80 °C) = 1,0A	**0291020-CE07** [2] 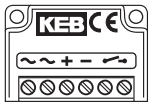	**0491020-CE07** [3] 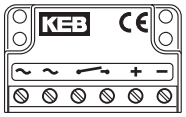		
half wave with EMC protection [1] $U_{out} = 0{,}45 * U_{in}$ I_N (45 °C) = 1,0A I_N (80 °C) = 0,5A	**0291010-CEMV** [3] 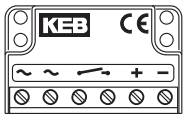			

U_{in}	maximum input voltage
U_{vmax}	maximum cut-off voltage
U_{out}	Output DC voltage
AC	AC switching
DC	DC-side switching
I_N (45 °C)	Rated output current at the temperature

[1] with internal interference suppression according to EN 55011/ class A
[2] picture 1 [3] picture 2
[4] different values (U, A) when used under UL conditions

Characteristics

- UL - certification (No.: E.308765)
- compact design in a plastic housing
- possible installation into the motor terminal box
- protection against voltage peaks of the switching contacts
- maximal ambient temperature 80 °C

Nominal voltage magnet	Coil voltage tolerance U_2 (U_{out})	AC voltage supply U_1 (U_{in})	Type of rectifier	
24 V DC				
105 V DC	93 - 118	230 V AC	half wave rectifier	(0291010-CE07)
205 V DC	182 - 230	230 V AC	full wave rectifier	(0291020-CE07)
180 V DC	162 - 198	400 V AC	half wave rectifier	(0491010-CE07)

picture 1

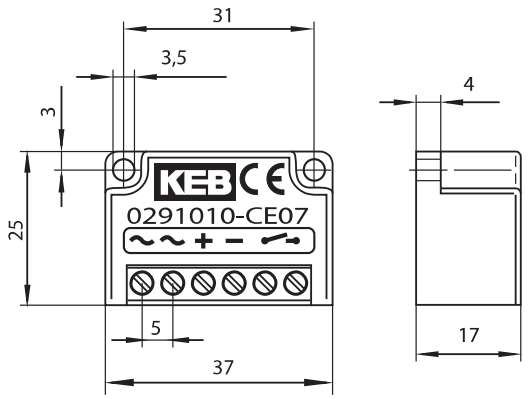

Terminal cross section 1,5 mm²

picture 2

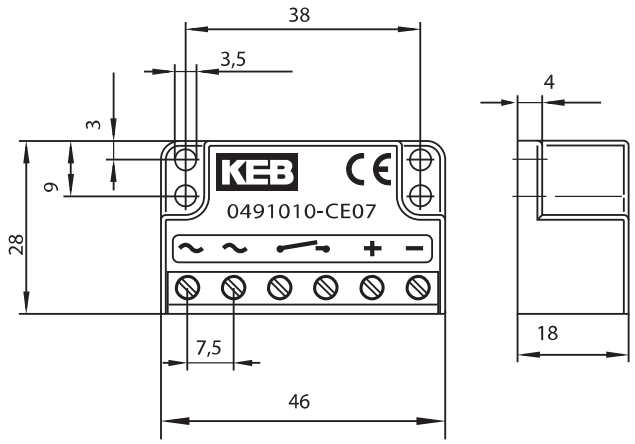

Terminal cross section 2,5 mm²

AC-side Switching

When switching before the rectifier on the AC-side the magnetic field decays slowly. At this mode of switching the tripping delay is quite long. The AC-side switching requires no protective measurements for the coil and the switching contacts. On disconnection the rectifier diodes act as free-wheeling diodes.

The switching times t_{11} for AC-side switching increase when the rectifier is connected directly in the motor terminal box **(2)**. When the motor slows down a generatoric voltage is applied to the motor terminals. The wiring **(2 and 3)** is not permitted for frequency inverter operation.

For line lenghts of more than 10 m between rectifier and brake at AC-side switching the regulations prescribe the use of a separate switch **(1)**. In this case the supply voltage may not be tapped behind the motor contactor **(2)**. If it is not possible to install an additional switch the use of special rectifiers becomes necessary.

Current-time-/Voltage-time-/ Torque-time-diagram

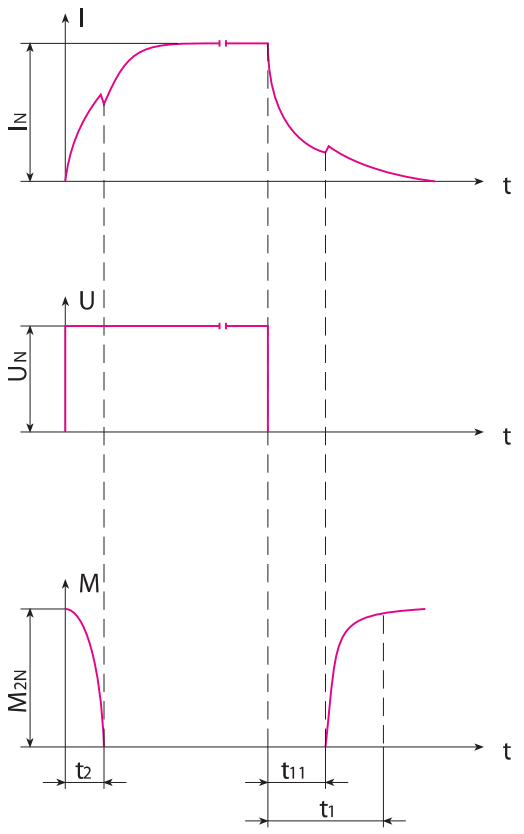

t_1 = Engagement time
t_{11} = Engagement delay time
t_2 = Release time

Wiring diagram

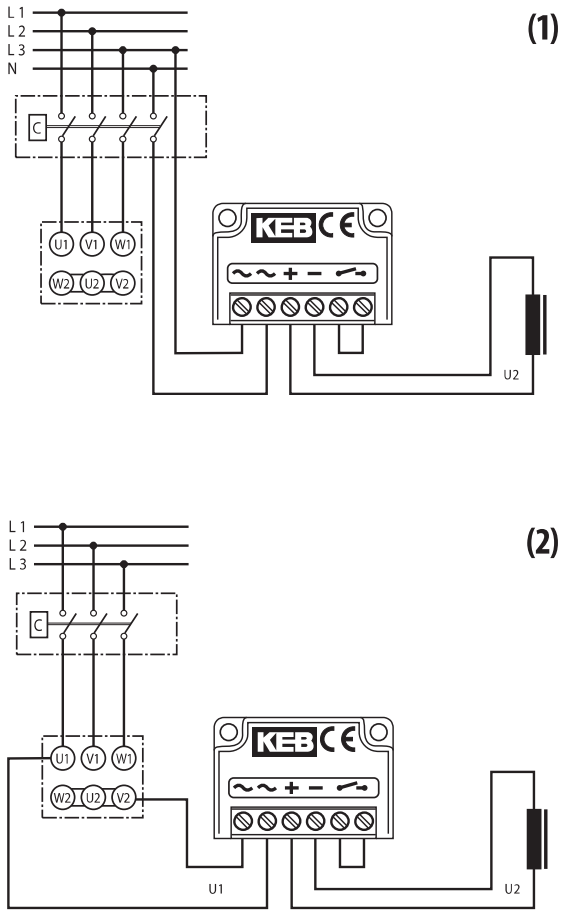

DC-side switching

The switching is done between the rectifier and the magnet. At his mode of switching the tripping delay is short, since the energy of the magnetic field is absorbed by the rectifier. The voltage peaks that occur at switching are limited to a harmless level for the rectifier.

The maximal permissible switching frequency for the DC-side switching of rectifiers depends on the energy content of the magnet for **COMBISTOP.** Higher switching frequencies are achieved by the external connection of a varistor in parallel to the brake or to the terminals + and - DC of the rectifier.

Rectifier	KEB-article	varistor
0291	0090045-2753	S20K275
0491	0090045-6251	S20K625
0591	0090045-6251	S20K625

Current-time-/Voltage-time-/ Torque-time- diagram

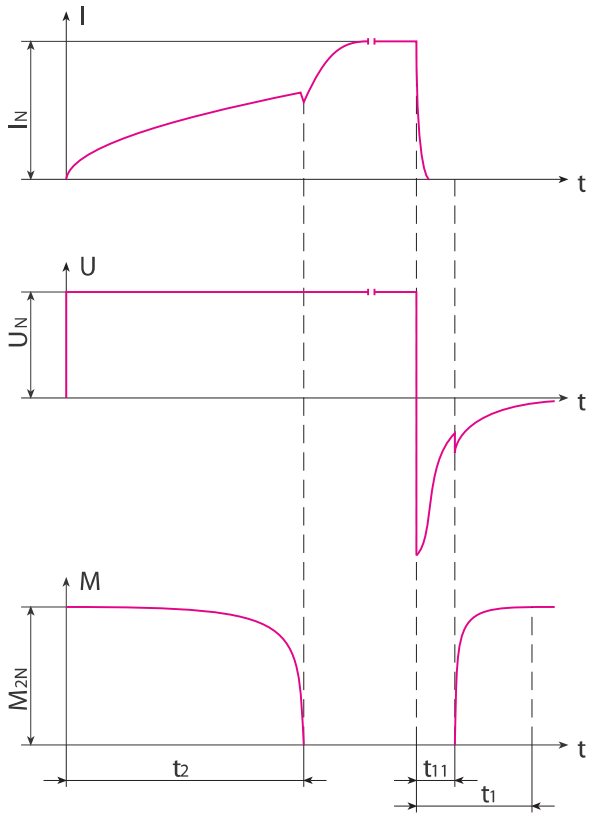

Wiring diagram

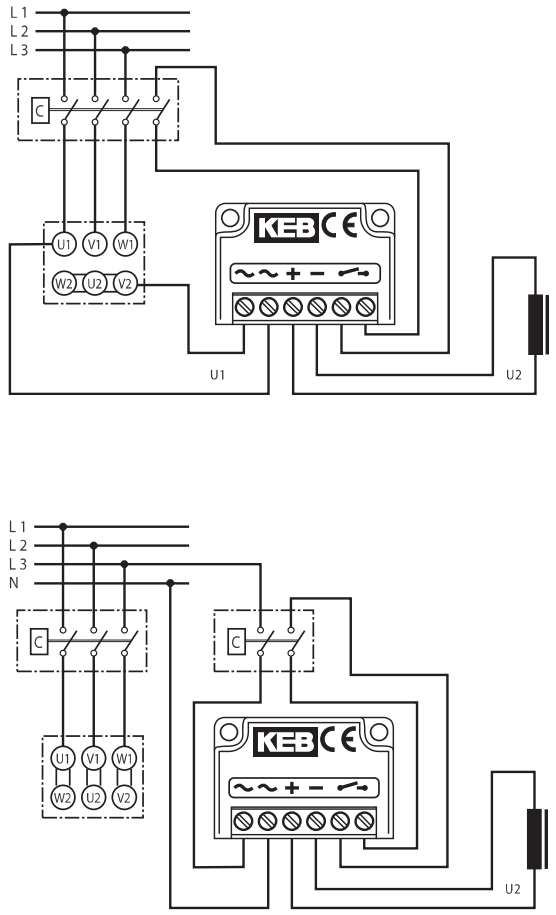

The simultaneous AC and DC-side switching, shown in example **4** guarantees short disconnecting times and reduces the contact erosion.